WHITE SUPER LOCK
MODEL 534

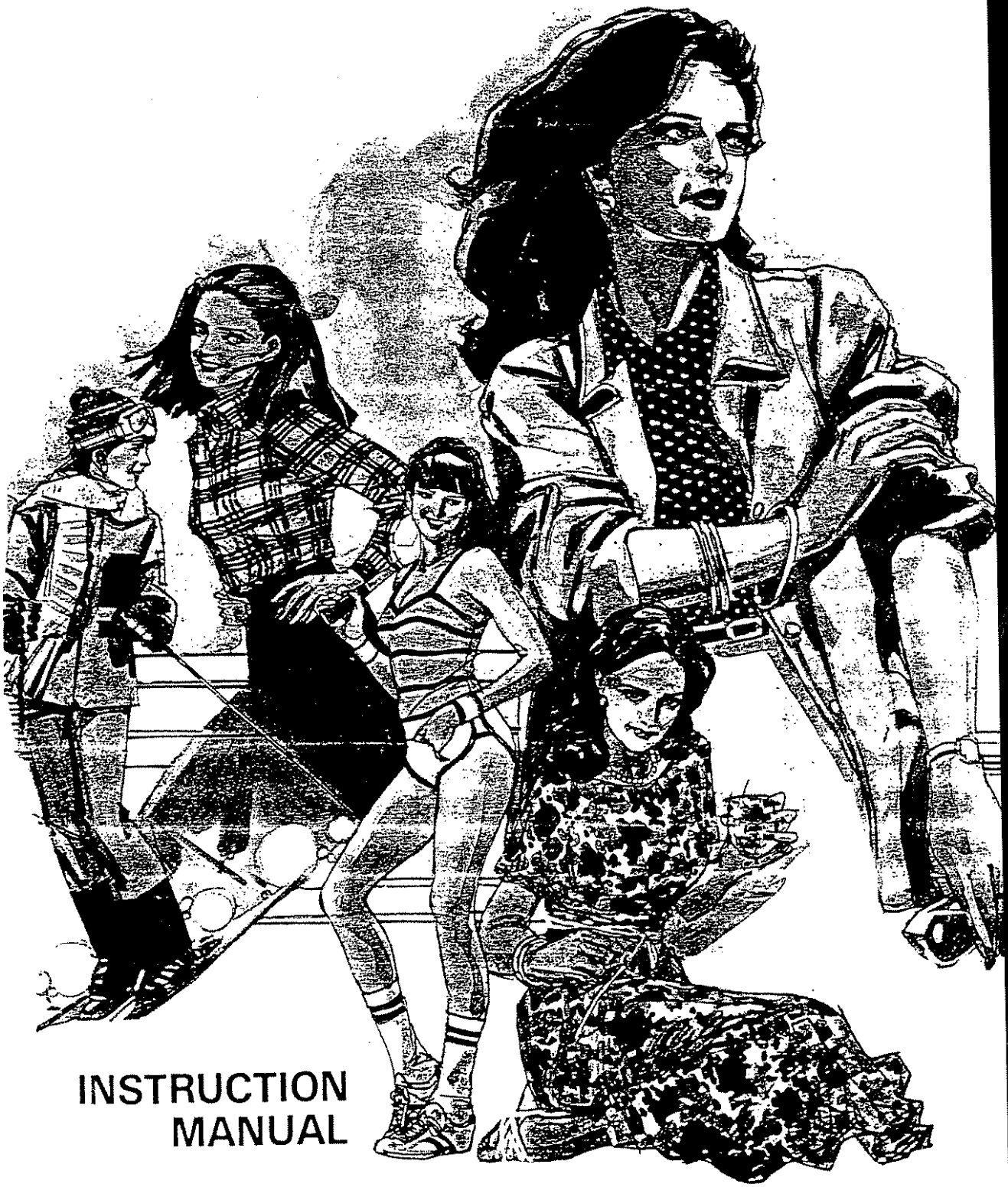

INSTRUCTION
MANUAL

TABLE OF CONTENTS

KNOWING YOUR MACHINE
Identification chart ..... 2 - 3
Parts list 4
Setting up your machine 5
Foot control, Power/light switch, Adjusting machine balance
Preparation for threading 6
Thread stand, Thread guide pole, Spool holder and caps
Fitting the needle(s), Needle, thread and fabric chart 7

STARTING TO SEW
Threading your machine
Looper threading ..... 8 - 9
Needle threading 10
Testing stitch 11
Adjusting thread tensions ..... 12 - 13
Three-thread overlock with one needle 14
Adjusting stitch length 15
Overlock edge finish 16
Fabric 17
Thread selection 17
Removing stitches from sewn fabrics 17
Finish seams 18
Outside corners 19
Inside corners and angles 20
Outward curve 21
Decorative effects ..... 22 - 24
Pin tucks, Decorative edges, decorative braids
Corded overlock 25
Four-thread overlock on knitted material 26
Quilting squares/triangles/diamonds 26

CARING FOR YOUR MACHINE
Replacing moving cutter 27
Changing light bulb 27
Cleaning and oiling 28

CHECKING PERFORMANCE PROBLEMS 29
SPECIFICATION OF MACHINE 30
OPTIONAL ACCESSORIES AVAILABLE FOR YOUR SUPERLOCK ..... 31 - 35

This booklet has been written for you, to help you use and enjoy fully your overlocking machine.

Before you start to use this machine, please take a few minutes to study this booklet. You will find it will be time well spent in understanding your machine.

If you have any questions regarding the use of your overlocking machine please do not hesitate to contact your dealer or ourselves.

WHITE SUPERLOCK SEWING MACHINE

Record in space provided below the Serial No. and Model No. of this appliance.
The Serial No. is located Rear of arm.
The Model No. is located Rear of arm.
Serial No. _____
Model No. 534

Retain these numbers for future reference.

WHITE SEWING MACHINE CO.
Cleveland, Ohio 44111

FRONT AND SIDE COVERS OPENED

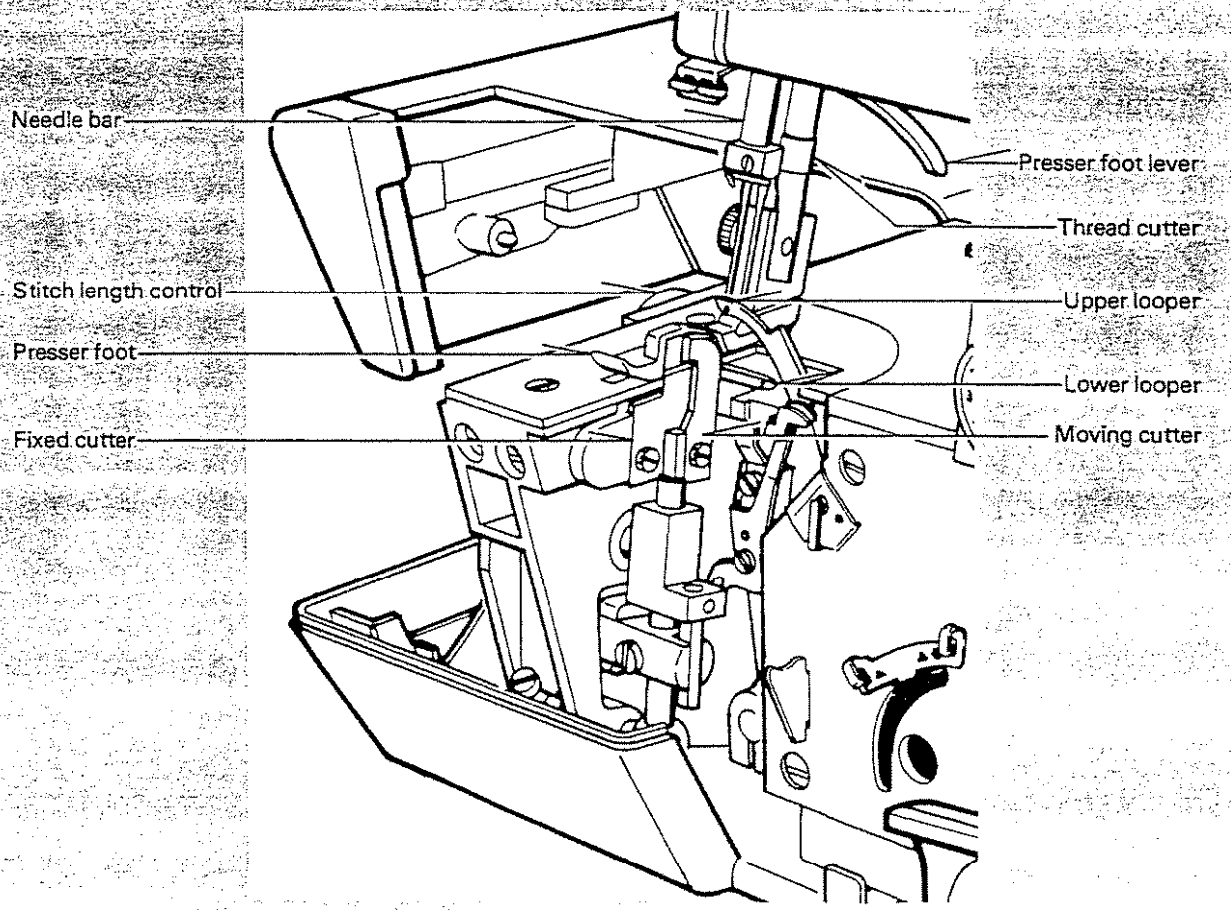

KNOWING YOUR MACHINE

IDENTIFICATION CHART

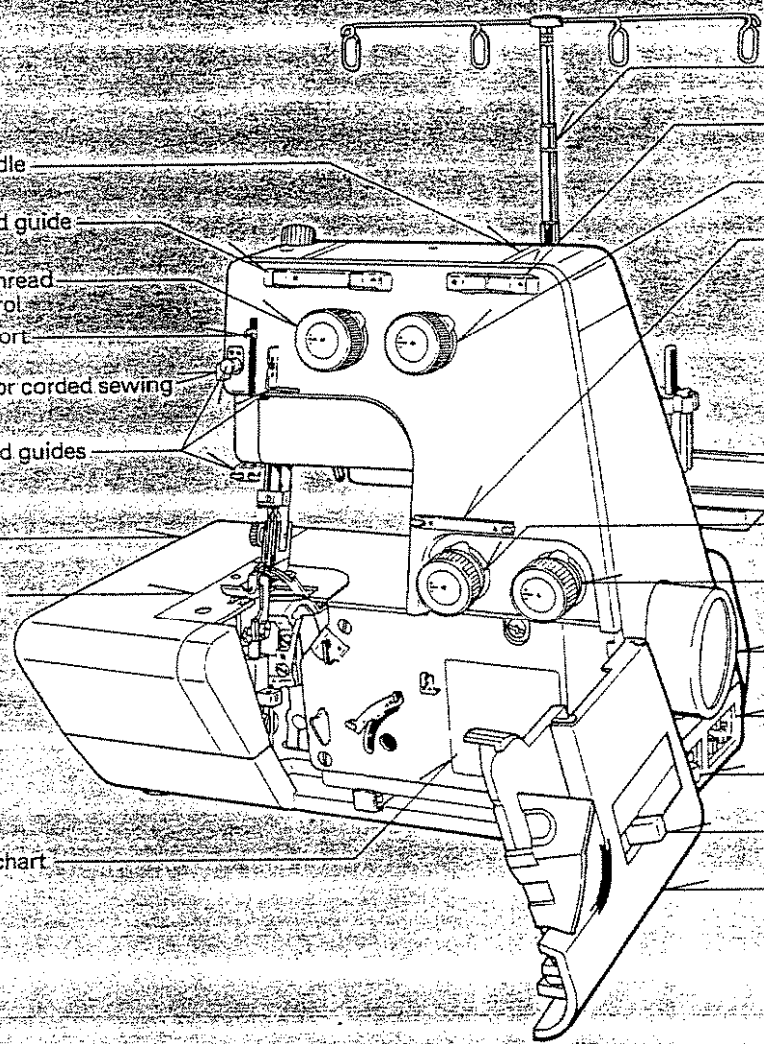

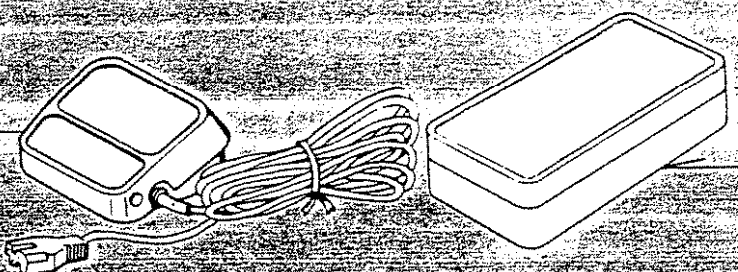

PARTS LIST

All parts listed may be obtained from your nearest dealer.

When ordering, please give:

1. The model and serial number of your machine, which you will find on the identification plate, at the back.
2. The part number and description.

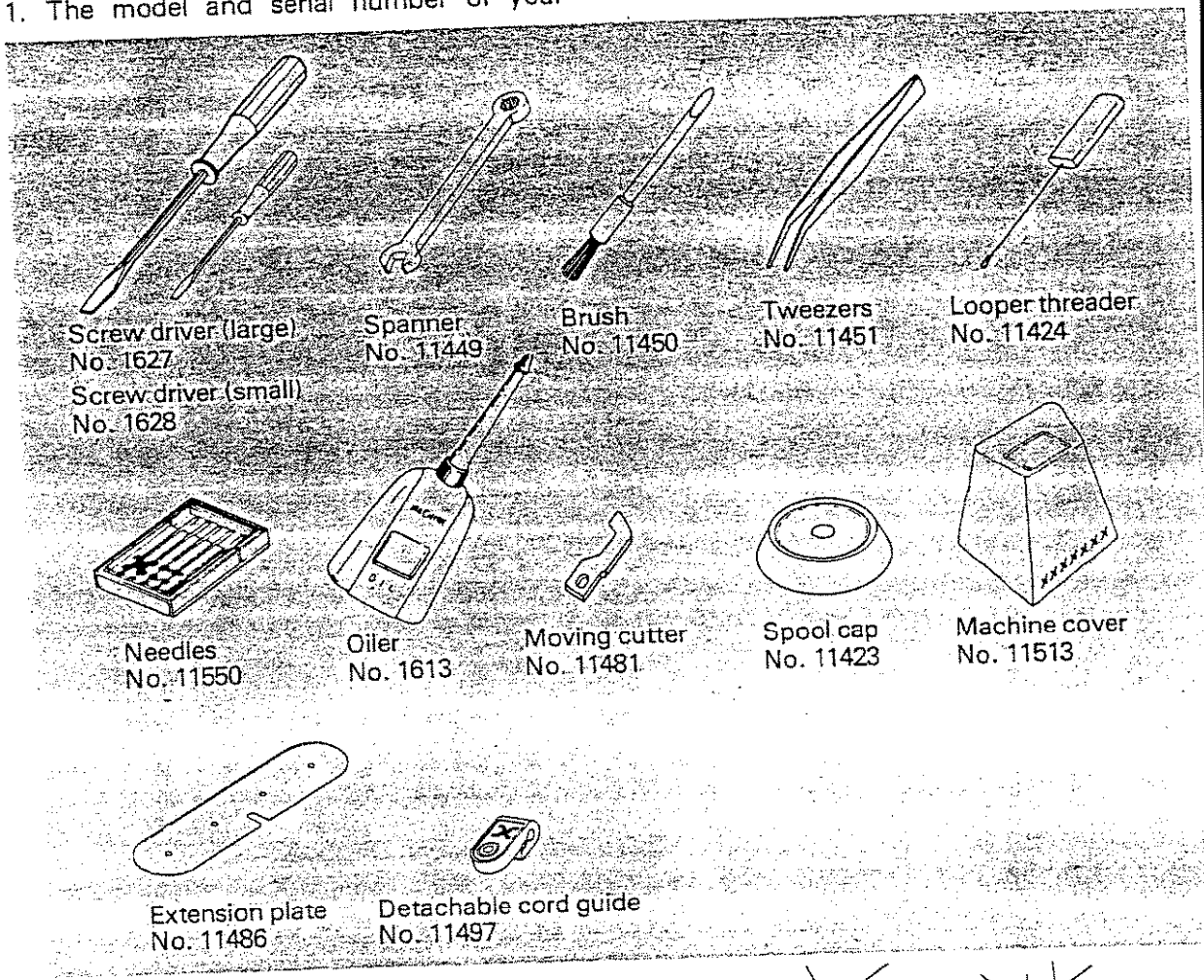

ARRANGEMENTS OF ACCESSORIES IN THE MACHINE'S BASE

Open the side cover by swinging away from you to the left.

Inside you will then find the special compartments which have been designed to store the various accessories.

By following the layout illustrated, you can then place each accessory into its most suitable position and keep them easily accessible when they are required.

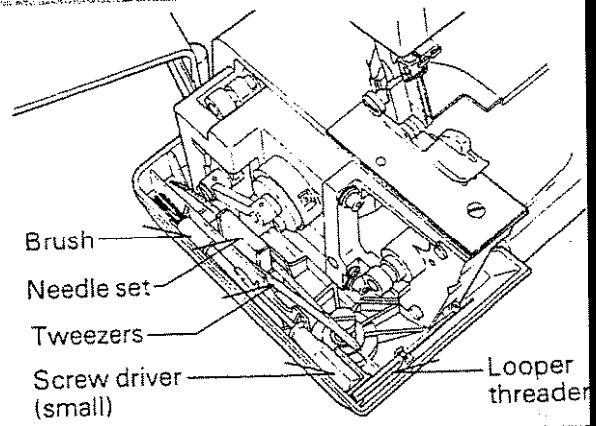

SETTING UP YOUR MACHINE

1. Set your sewing machine on a sturdy, flat surface.

2. Your sewing machine has been thoroughly oiled at the factory. Be sure to wipe off the needle plate area and bed plate carefully before sewing a garment. It is wise to practice on a scrap of fabric so any surplus oil is absorbed.

3. FOOT CONTROL
   Push foot control plug into the connector socket at the bottom right-hand side of the machine.

4. POWER/LIGHT SWITCH
   Your machine will not operate unless the power/light switch is turned on. This same switch controls both the machine power and sewing light. When leaving your machine unattended, the machine MUST be switched off or the plug removed from the socket-outlet.
   When servicing the sewing machine, or when removing covers or changing lamps, the machine MUST be disconnected from the supply by removing the plug from the socket-outlet.

5. ADJUSTING MACHINE BALANCE
   In order that you may be able to compensate for any uneveness on your working surface, the machine is fitted with an adjustable rubber stud. This can be located by opening the side cover where it will be seen inside to the left.

   Turn the screw clockwise to lower the rubber stud beneath the machine and counter clockwise to raise the rubber stud.

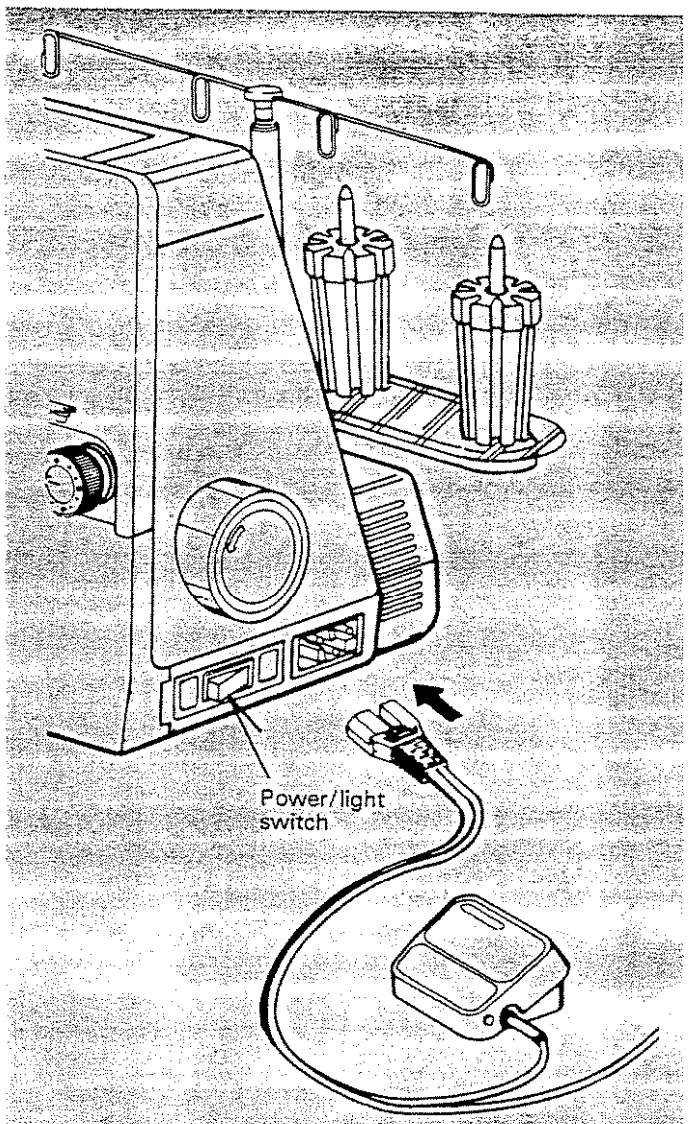

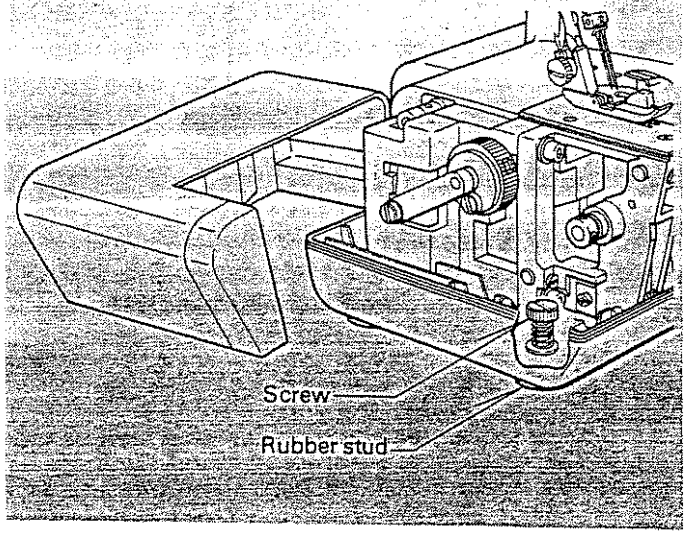

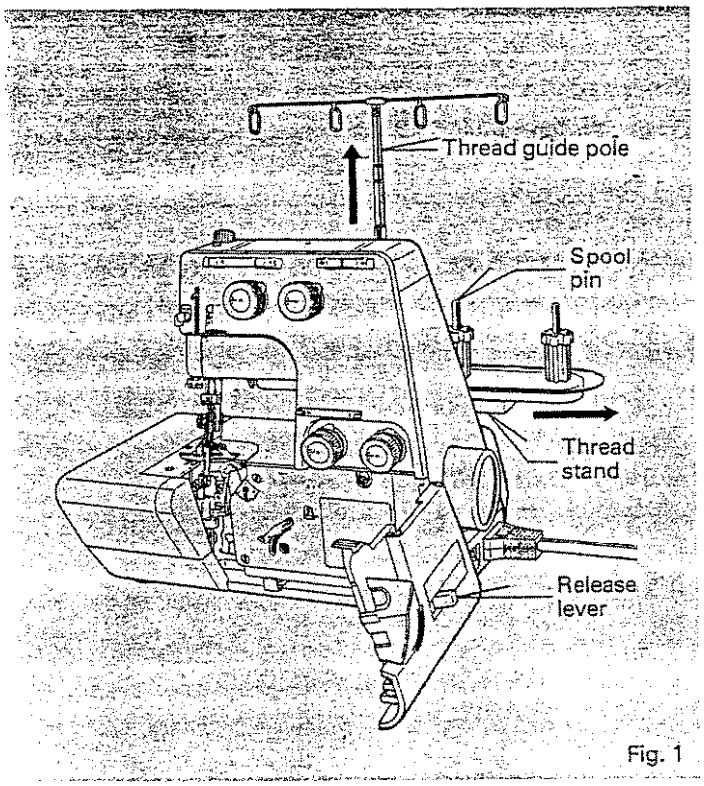

Fig. 1

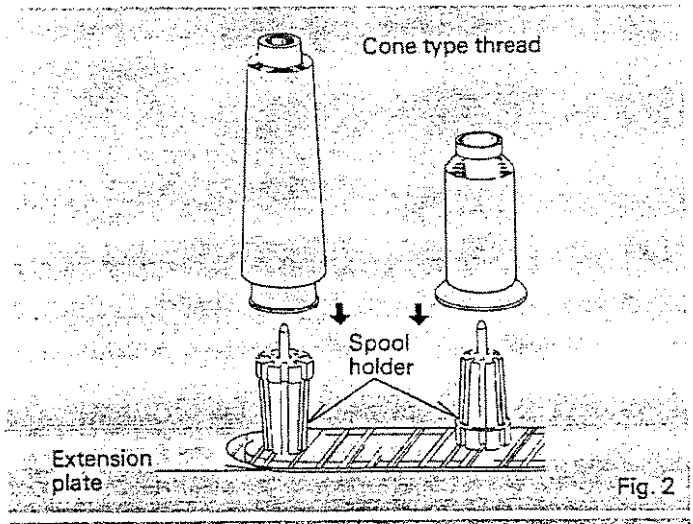

Fig. 2

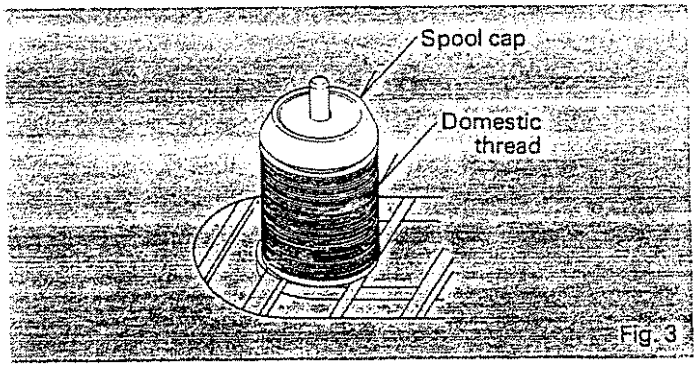

Fig. 3

PREPARATION FOR THREADING

To open front cover, push release lever to the right and then swing it to the right. It will close and be latched automatically by swinging it back lightly, Fig. 1. The side cover can be opened in a similar manner.

THREAD STAND

Push the thread stand all the way to the right as the arrow indicates in Fig. 1 until it clicks.

To put it back in the position for storage with dust cover, push it back all the way to the left.

THREAD GUIDE POLE

Pull up thread guide pole to its highest point. Place threads on spool pins and draw threads through thread guides on the pole *from rear to front,* Fig. 1.

SPOOL HOLDER AND CAPS

Both cone and domestic type thread spools can be used on this machine.

Always use the extension plate with spool holders, as shown in Fig. 2.

For large diameter cone spools use the rubber spool holders with the *large end at the top,* and for small diameter ones, use the same rubber spool holders with the *small end at the top,* Fig. 2.

When using domestic type thread spools, remove the spool holders and place spool caps over the thread spools, Fig. 3.

FITTING THE NEEDLE(S)

Raise the needle bar to its highest point by turning the hand wheel towards you, *but leave the presser foot down.*

Loosen the needle clamp screw to remove old needles, Fig. 4. Place new needles with FLAT SIDE AWAY FROM YOU, up into the groove of the needle bar, *ensuring that they are inserted as far up as they will go.* Re-tighten the needle clamp screw securely.

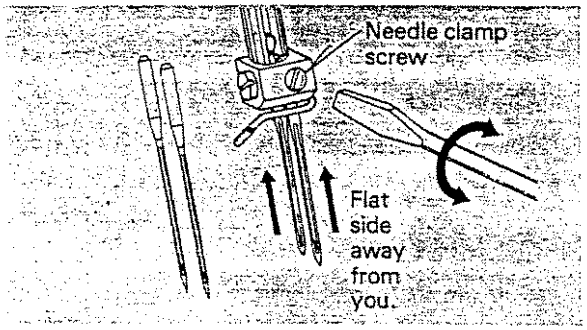

NEEDLE, THREAD AND FABRIC CHART

Use HA × 1 SP, HA × 1 (130/705 H) Needles.

	FABRIC	THREAD	NEEDLE
COTTON LINEN	Light Weight: Organdie, Lawn, Gingham	Cotton No. 100	100 (16) for heavy weight fabrics: denim 90 (14) for general sewing 75 (11) for light weight fabrics
	Heavy Weight: Oxford, Denim, Cotton Gabardine	Polyester No. 60-50 Cotton No. 60	
WOOL	Light Weight: Tropical, Wool, Poplin	Polyester No. 80 Cotton No. 60	
	Serge, Gabardine, Flannel	Polyester No. 80 - 60 Cotton No. 60	
	Heavy Weight: Velours, Camelhair, Astrakhan	Polyester No. 60 - 50 Cotton No. 60	
SYNTHETIC FIBRE	Light Weight: Georgette Crepe, Voile, Satin	Polyester No. 100 - 80 Cotton No. 120-80	
	Heavy Weight: Taffeta, Twills, Denim	Polyester No. 60 Cotton No. 60	
KNIT	Tricot	Polyester No. 80 - 60 Cotton No. 80-60	
	Jersey	Polyester No. 60 - 50 Cotton No. 60	
	Wool	Polyester No. 60 - 50 Bulk Nylon	

* Synthetic threads are recommended for ordinary overlocking. Polyester thread, for example, is very useful for different types of fabric.

STARTING TO SEW

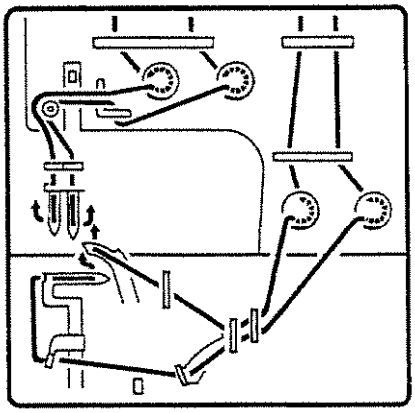

Fig. 1

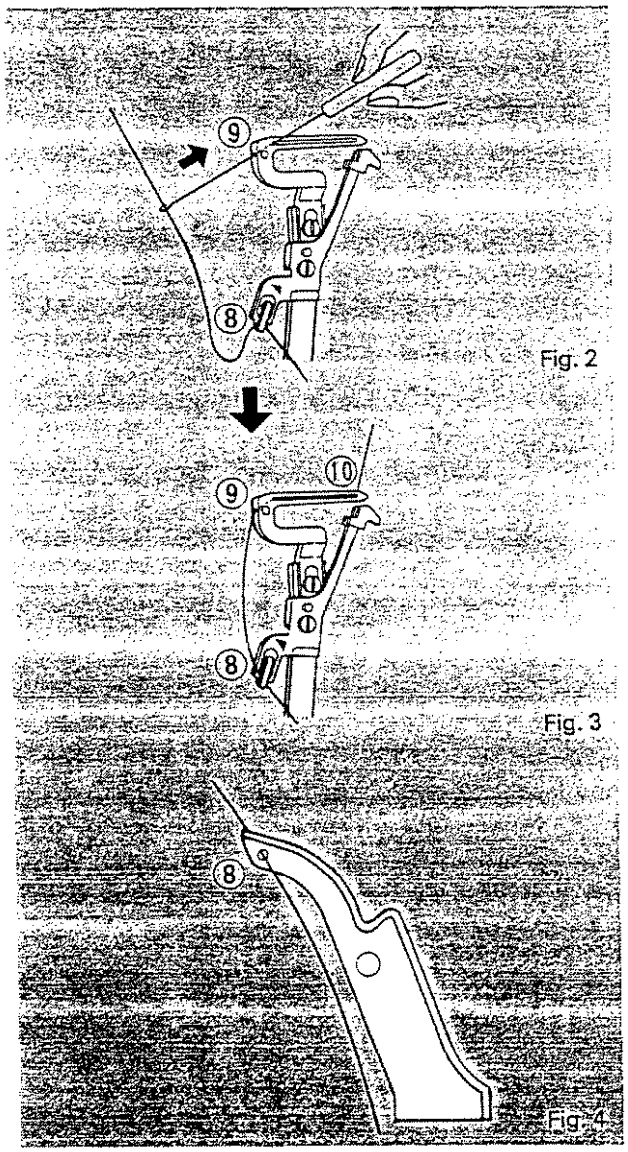

Fig. 2

Fig. 3

Fig. 4

THREADING YOUR MACHINE

1. Raise the needle bar to its highest point by turning the hand wheel towards you by hand.
2. Threading must be carried out in the following sequence:
   FIRST lower looper; SECOND upper looper; FINALLY needle threads. If it is necessary at any time to re-thread lower looper, ALWAYS remove the thread from the needles to avoid tangling.
3. Follow carefully the threading 'paths' in the chart in the machine (Fig. 1) and lead each thread through thread guides with same symbols imprinted—improper threading will result in several problems such as skipped stitches and breaking threads etc.
4. To assist thread passing around tension controls turn all four anti-clockwise until they stop at '0' setting. Ensure thread passes cleanly through the tension discs *and behind the pointed hook in each case* (see diagrams-Pages 9 and 10).
5. To help in threading, a threader and tweezers will be found in the accessory case.

LOOPER THREADING

Lower looper - colored PURPLE on chart and ▲ symbols on thread guides.

1. Draw thread from spool, as shown on diagram (page 9) through the thread guides and purple tension control (steps 1 - 7). Then onto thread guide just inside machine, below lower looper (8, Fig. 2).
2. Insert threader through left hand hole of lower looper (from right to left - see 9, Fig. 2). hook round thread, and draw back through same hole (9).
3. Unhook thread from threader and then pass it through hole at far right of lower looper (10, Fig. 3) and draw back under rear of presser foot, leaving about 10 cm of clear thread.

Upper looper - colored BLUE on chart and ● symbols on thread guides.

1. Follow similar procedure as above, as also shown on diagram page 9, taking thread through the thread guides and blue tension control and threading though the hole in the upper looper (see 8, Fig. 4). Finally, pass the thread under rear of presser foot, leaving about 10 cm of clear thread.

NOTE: If you are using an overlock machine for the first time, it may be found an advantage to thread up the first few times using different colored threads (say similar to colors on the tension controls). This will help identify which is which and also for adjusting tensions.

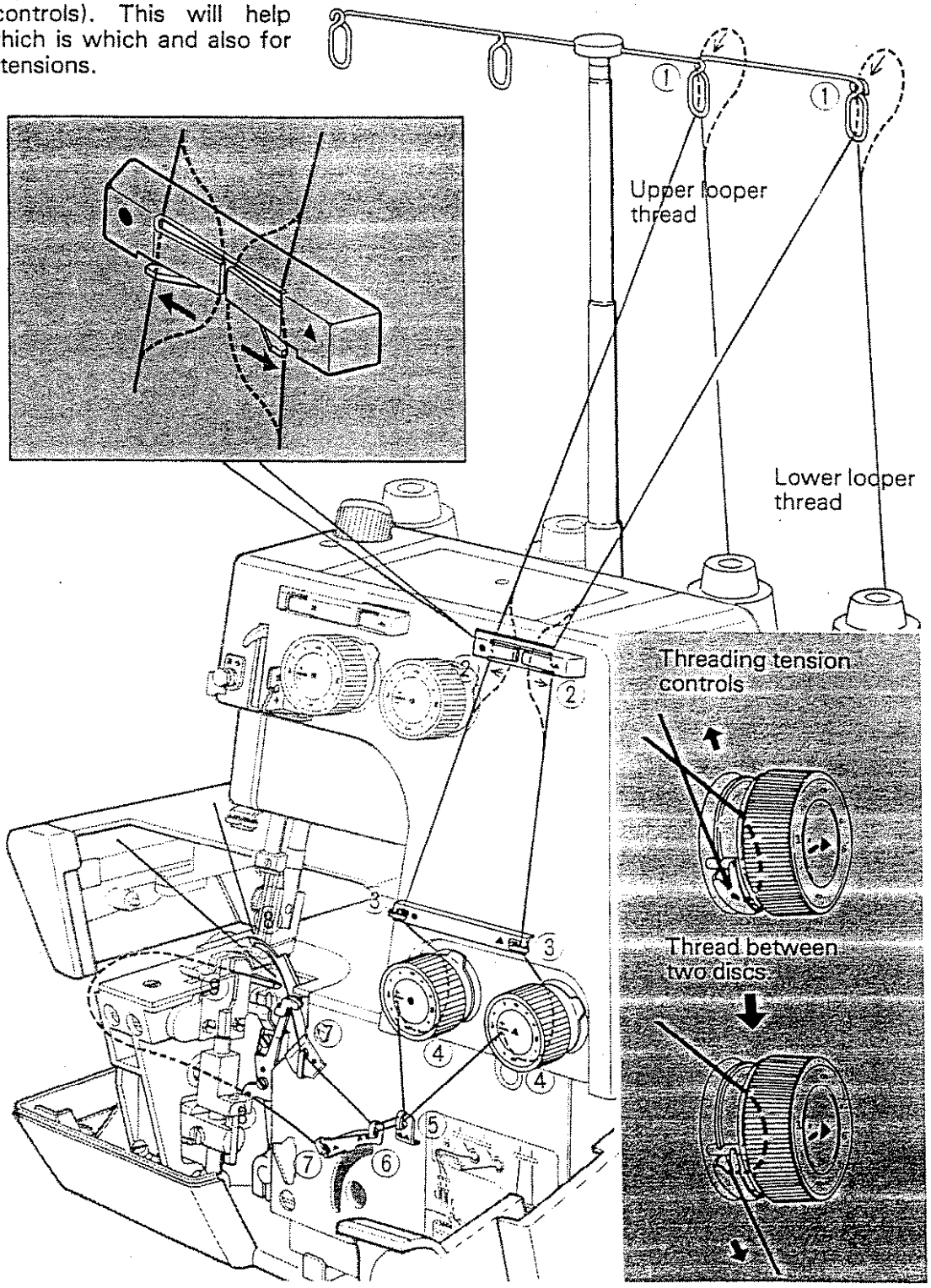

NEEDLE THREADING

Lastly needle must be threaded. Follow the 'path' colored GREEN on chart for left needle, taking the thread around the green tension control and through the thread guides with ■ symbols.

Follow the 'path' colored YELLOW on chart for right needle, taking the thread around the yellow tension control and through the thread guide with ◆ symbols, but by-passing check spring on the tension control.

When overlocking with three threads using the right needle only (see page 14), thread the yellow tension control, pulling check spring up and past the pointed hook until thread can be slipped into the hook. When the thread is released, the check spring will return to original position with the thread in place.

Finally thread needle(s) from FRONT to BACK and then under the presser foot, leaving about 10 cm of thread(s).

Should it be necessary at any time to re-thread the lower looper, ALWAYS remove thread(s) from needle(s) first to avoid tangling.

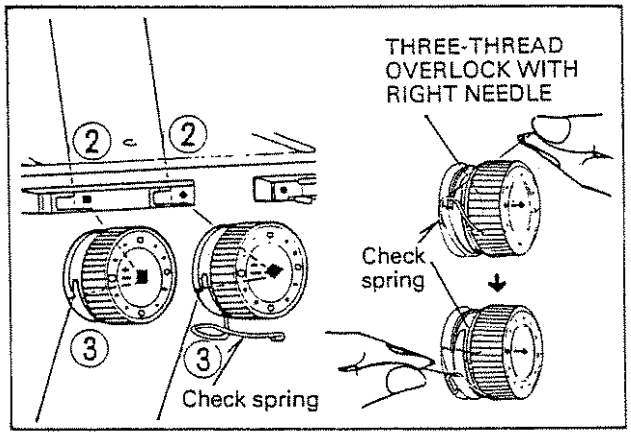

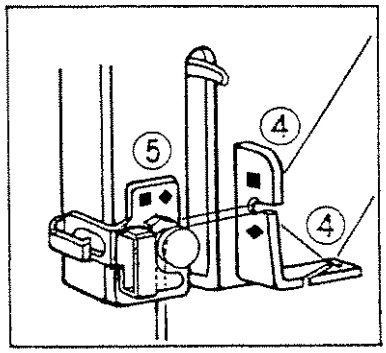

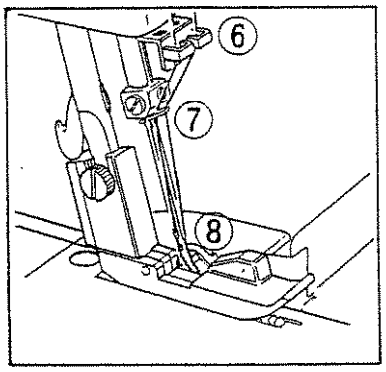

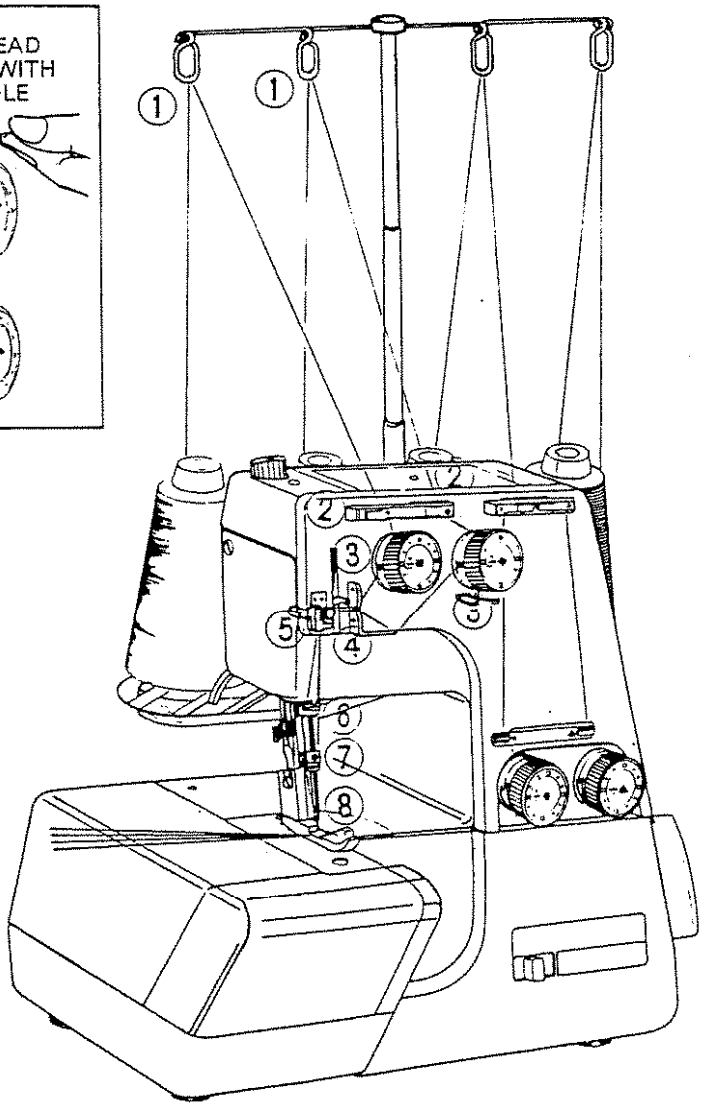

TESTING STITCH

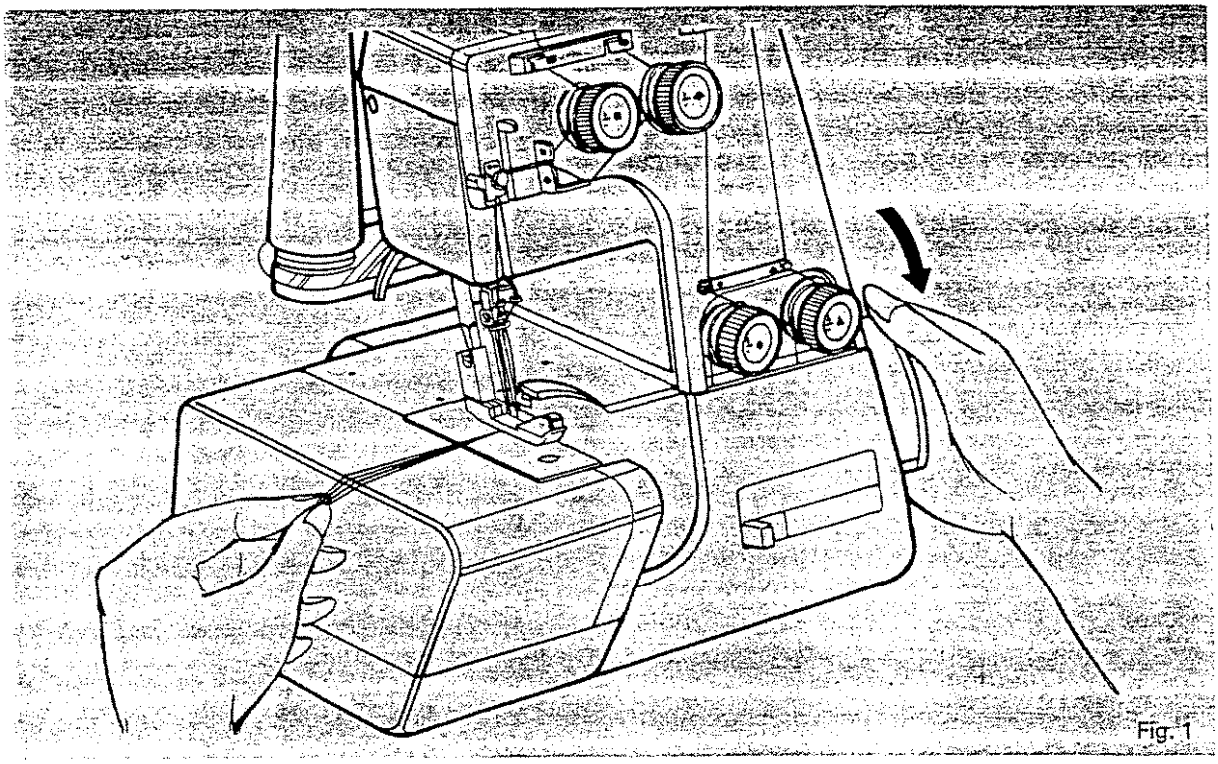

Fig. 1

After threading is completed test the machine stitch in the following order:

1. *Without any material under the presser foot* (see Fig. 1), lower presser foot. Pull the ends of the threads gently with your left hand towards the rear of the machine, turning the hand wheel towards you a few times with your right hand.

   Check the stitch formation produced to see if it is uniform. If not, re-check that threading has been carried out correctly.

2. Now test the machine again but this time use a spare piece of the fabric you propose using.

3. After you reach the end of the fabric, continue sewing for about 5 - 7 cm beyond the end of the fabric at slow speed and trim off with a sharp pair of scissors. (See Figs 2 and 3).

In order to be sure you have the correct stitch and to make any adjustments that may be necessary turn to page 12.

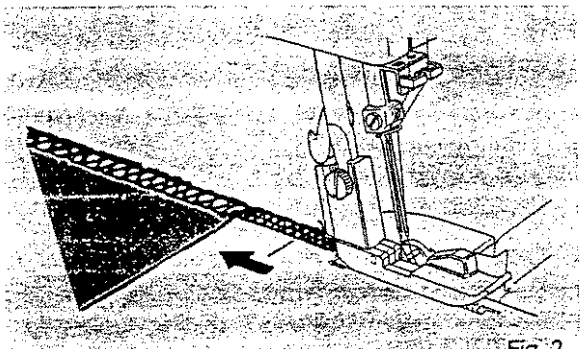

Fig. 2

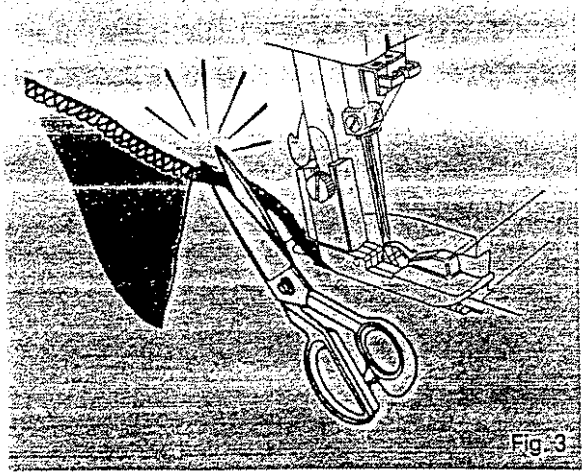

Fig. 3

ADJUSTING THREAD TENSIONS

Thread tensions will vary according to the type and thickness of both thread and fabric. Turning the tension controls clockwise will increase tension (+) and anti-clockwise (—) decrease tension. All the control knobs can be turned about 1¾ rotations. The correct balance of stitch should look as follows:

UPPER LOOPER THREAD should lie flat on the top-side of fabric and lock with the lower looper thread on the edge of the material.

LOWER LOOPER THREAD should lie flat on the underside of fabric and lock with the upper looper thread on the edge of the material.

NEEDLE THREADS act as 'safety stitches' and should lie mainly on the top side (like rows of normal straight sewing) on the upper looper thread, and just visible in the lower looper thread on the underside of the fabric.

If threads do not appear as above, adjust as follows:

First turn all tension controls anti-clockwise until they stop at the '0' setting.

Then turn each knob clockwise to the following settings;

left needle thread tension knob	to	"4"
right	"	to "2"
upper looper thread	"	to "3"
lower	"	to "3"

Now sew the fabric again and compare with Fig. 1, page 13.

If the upper looper thread is seen to be loose, or is pulled over to the underside of the fabric (as Fig. 2, page 13), increase upper looper tension (Blue) and/or decrease lower looper tension (Purple).

If lower looper thread is seen pulled up onto the top-side of fabric (Fig. 3, page 13), increase lower looper tension (Purple) and/or decrease upper looper tension (Blue).

If left needle thread is loose and clearly visible on underside of fabric (Fig. 4, page 13), increase left needle thread tension (Green) and/or decrease either or both looper threads.

If right needle thread is loose and clearly visible on underside of fabric (Fig. 5, page 13), increase right needle thread tension (Yellow).

A simple amount of experimenting will quickly achieve a correctly balanced stitch.

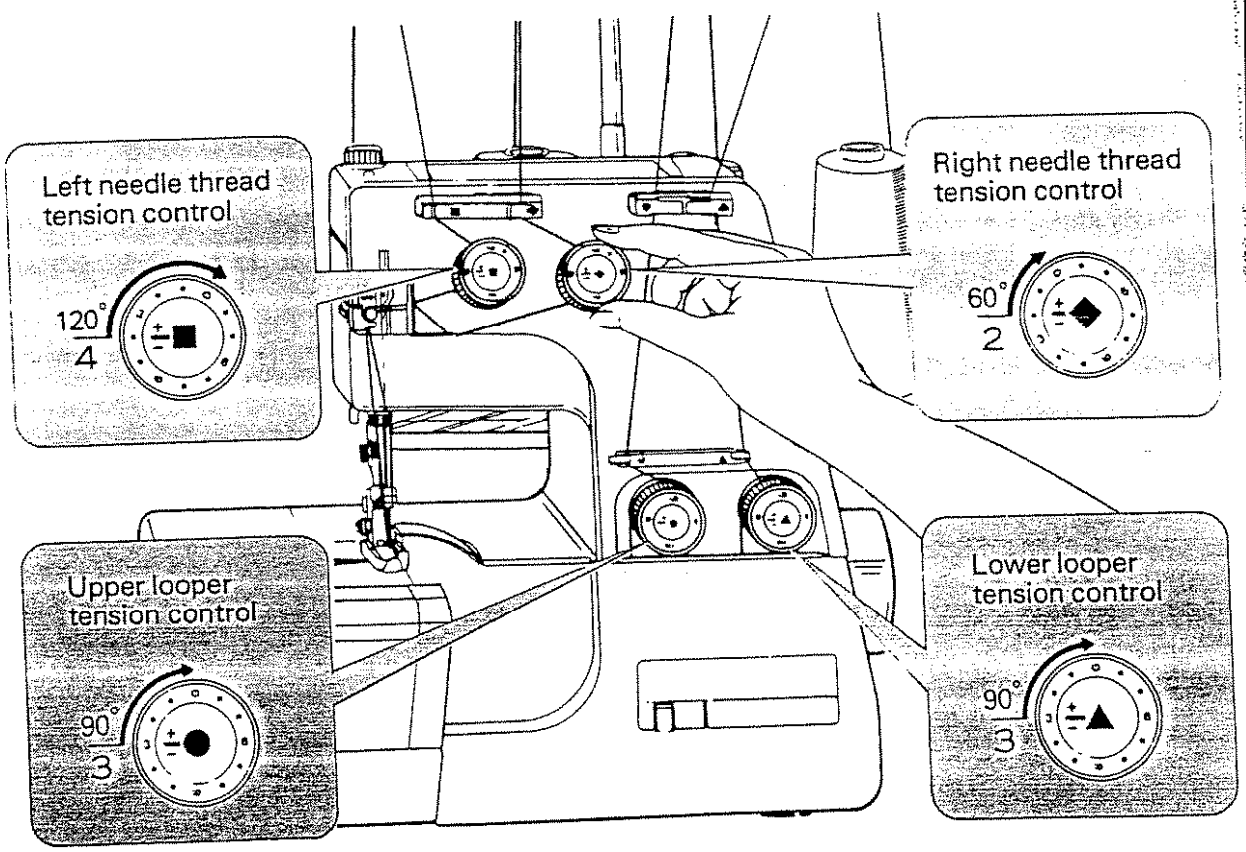

Just right.

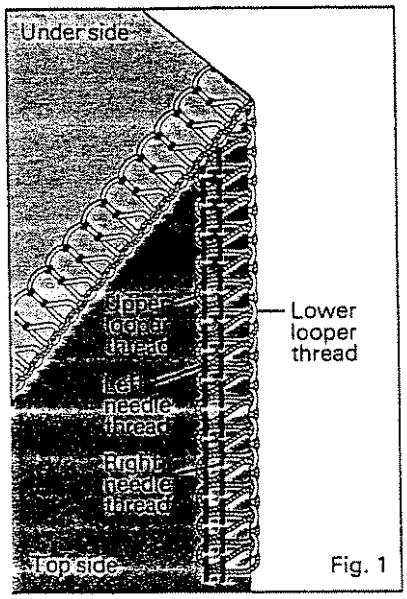

Fig. 1

Upper looper thread pulled to under side.

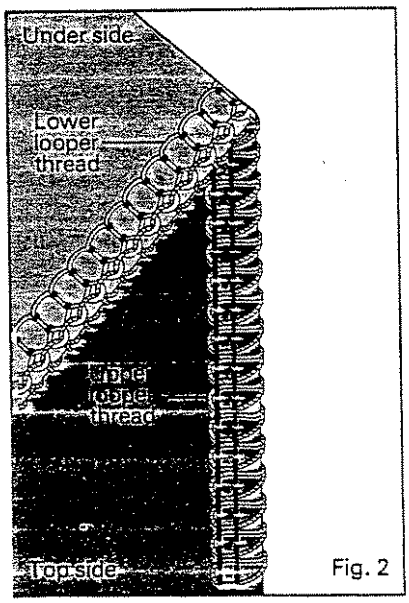

Fig. 2

Increase upper looper thread tension and/or decrease lower looper tension.

Lower looper thread pulled to top side.

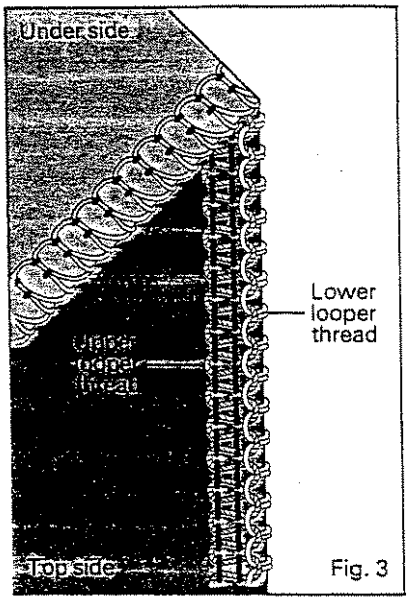

Fig. 3

Increase lower looper thread tension and/or decrease upper looper tension.

Left needle thread loose and visible on under side of fabric.

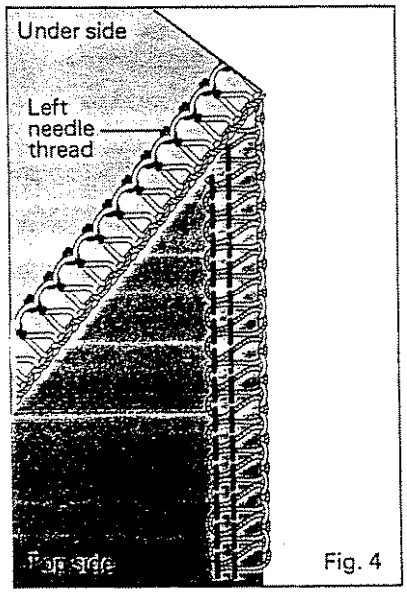

Fig. 4

Increase left needle thread tension and/or decrease either or both looper threads.

Right needle thread loose and visible on under side of fabric.

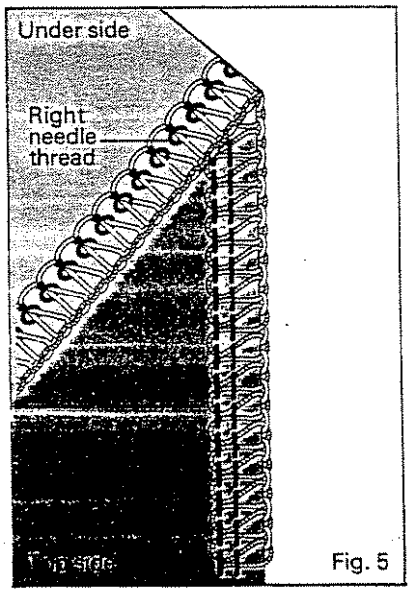

Fig. 5

Increase right needle thread tension.

THREE-THREAD OVERLOCK WITH ONE NEEDLE

In addition to the four-thread overlocking mainly featured on this machine, it is possible to produce simple three-thread overlock seams by threading only ONE needle. Furthermore it is also possible to achieve two different seam widths. By threading the LEFT needle only a width of 5 mm will be produced and by threading the RIGHT needle only a width of 2.8 mm will be produced (see diagrams below).

Number of threads	3 threads		4 threads (described previously)	
Overedge width	5 mm	2.8 mm	5 mm	
Needle(s)	Use left needle only.	Right needle only.	Two needles.	
Needle thread tension control(s)	Green control	Yellow control (Thread through Check Spring. See page 10.)	Green control	Yellow control (By-pass Check Spring.)
	Lightweight fabric: 3	3	4	2
	Medium to heavy : 8-9	8 - 9	8 - 9	4 - 5

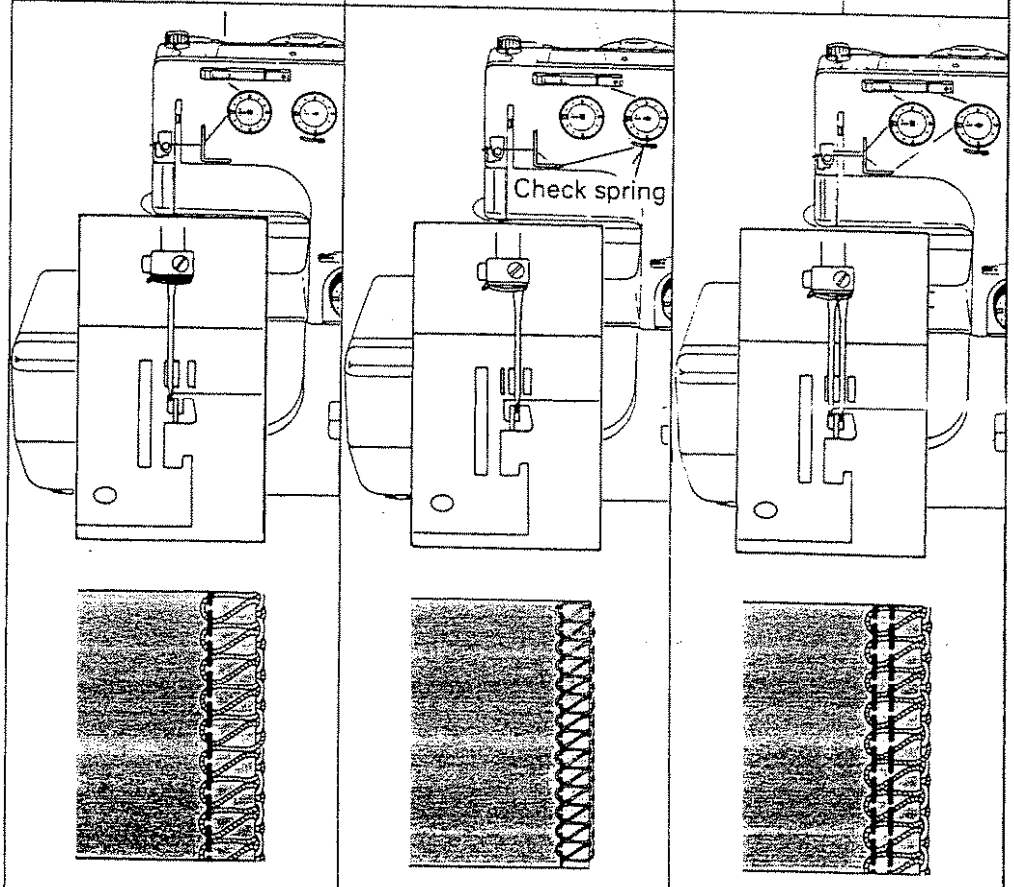

ADJUSTING STITCH LENGTH

1. When you wish to adjust stitch length, open the side cover.
2. Holding the hand wheel tightly with your right hand, turn the stitch length dial with your left hand until the required length appears in the indicator window. The higher the number - the longer the stitch. This dial allows for adjustment of stitch length from 1 to 5 mm.

RECOMMENDED STITCH LENGTH SETTING

Regular hem	1 to 5 mm 3 mm (standard setting)
Narrow hem	1.5 to 2 mm
Rolled hem	1 to 2 mm

When sewing on 'stretch fabrics' or 'knits' it may be advisable to adjust the stitch length to quite different settings to those shown above. Because of the wide range of these fabrics which are now available it is not possible to give specific settings. It is suggested, therefore, that you make several sewing tests, with various settings to determine the most suitable for the particular job in hand.

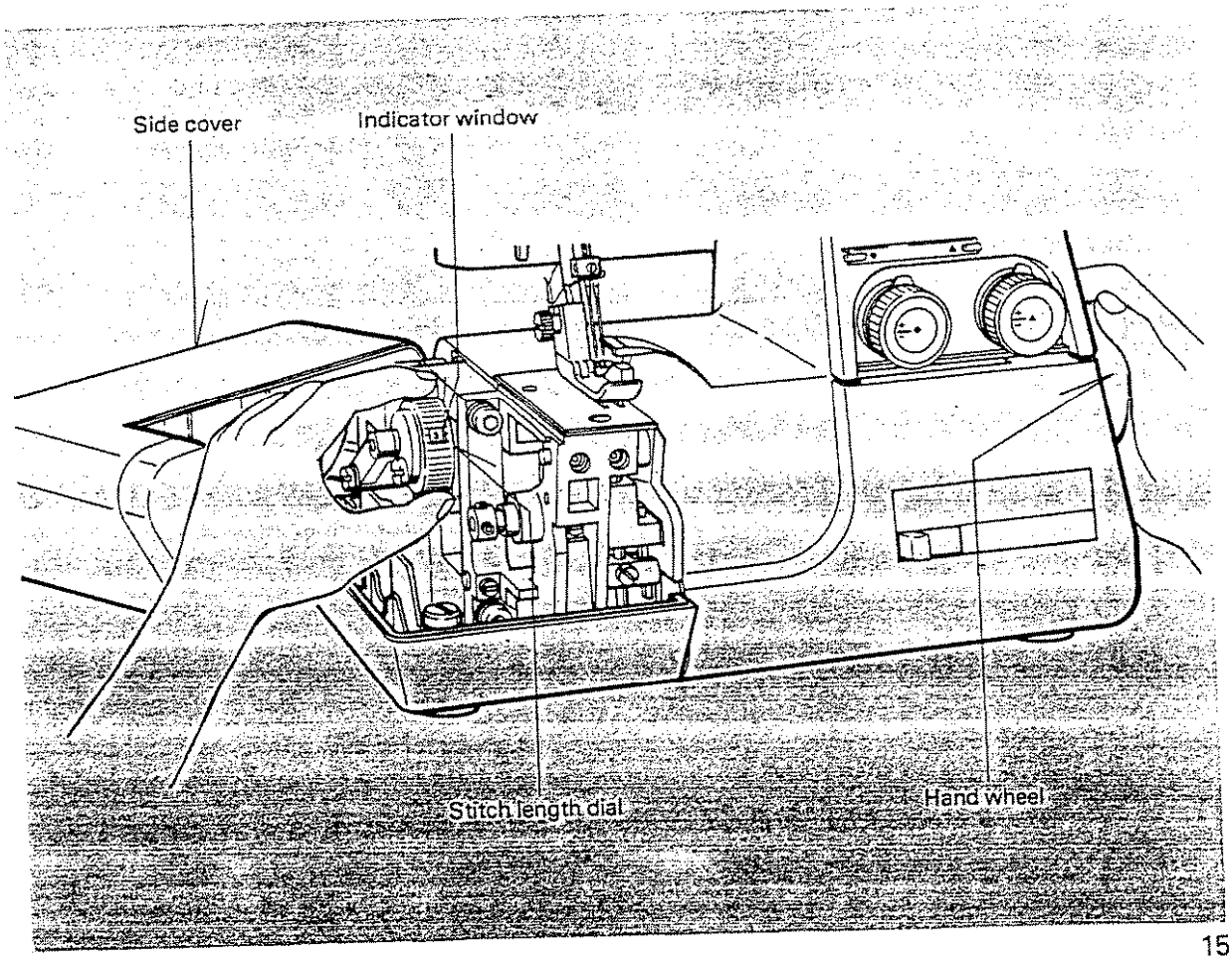

OVERLOCK or SERGING is a term used to describe a new concept of home sewing copied from industrial sewing machines. Your White Superlock sewing machine will help you create a professional finished look to your garments, craft, or household items. You may use your superlock as an accessory to your present sewing machine to give your garments that finished "designer" look.

OVERLOCK EDGE FINISH

Your Superlock sewing machine gives you a quick, practical way to finish garments using three or four threads. Three threads are formed to overlock the edge of your material at a width ranging from 2 mm with a rolled hem, to 2.8 mm and 5.0 mm by using either the left needle or right needle. A locking flexible effect is made in your material with three threads, plus a fourth thread which forms a single line or safety stitch thru the overlock to prevent separation or raveling. The Superlock will also cut and trim the material prior to stitching to form a professional overlock trimmed edge finish.

This overlock edge finish may be used on the inside, outside, or as a decorative feature.

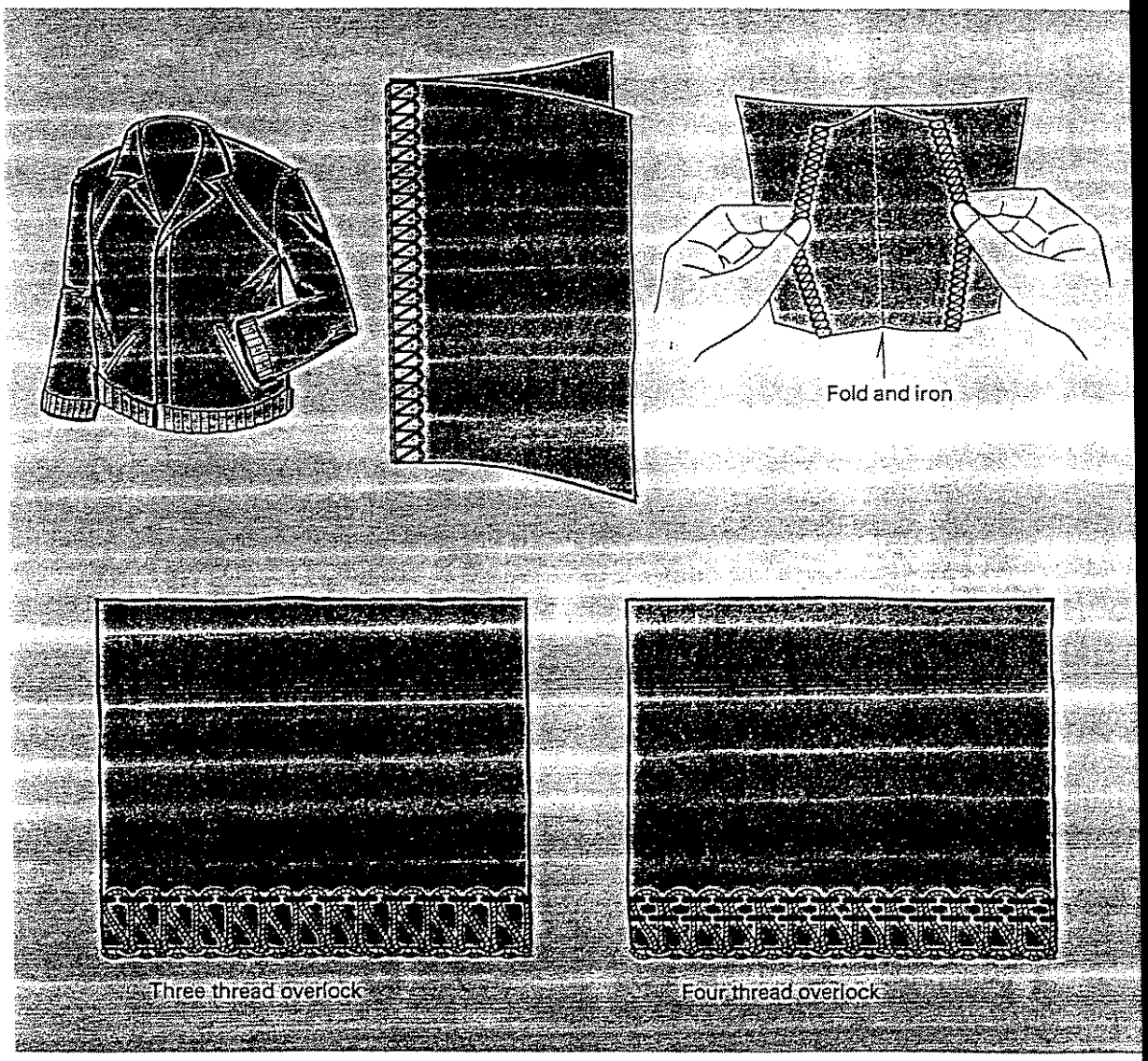

FABRIC

Your Superlock will sew most materials available on today's market, tricot to denims. It may be necessary to adjust tensions, cutters and stitch length to make a good stitch. Select the stitch width suitable for the specific fabric by sewing test samples on the same material you plan to overlock. Some materials may need prewashing to remove backing, dirt gathering protectors, or other additives to prevent skip stitches.

ALWAYS TEST THE MATERIAL TO BE OVERLOCKED BY SEWING SAMPLES.

THREAD SELECTION - CONVENTIONAL SEWING

Select threads of one type only when using your Superlock.

Example: All three threads should be mercerized cotton, spun polyester, or cotton covered polyester, etc. Different threads on the machine may cause time consuming thread tension adjustments. It should be borne in mind that the lower and upper loopers will use about twice the amount of thread than the needle thread. When purchasing thread for sewing, especially if it is an unusual color, you should buy sufficient for your requirements.

Use the spool holders or caps as needed to fit your particular needs.

CAUTION: The use of industrial type thread may cause tension problems due to coarse and uneven weave of the thread.

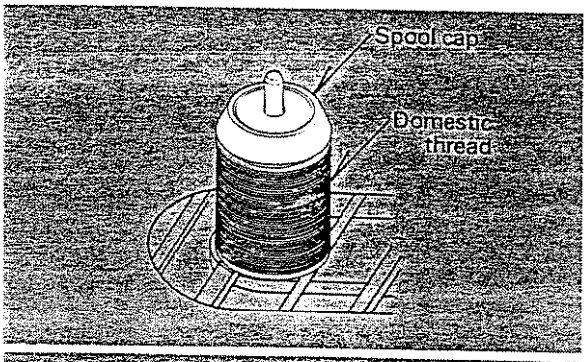

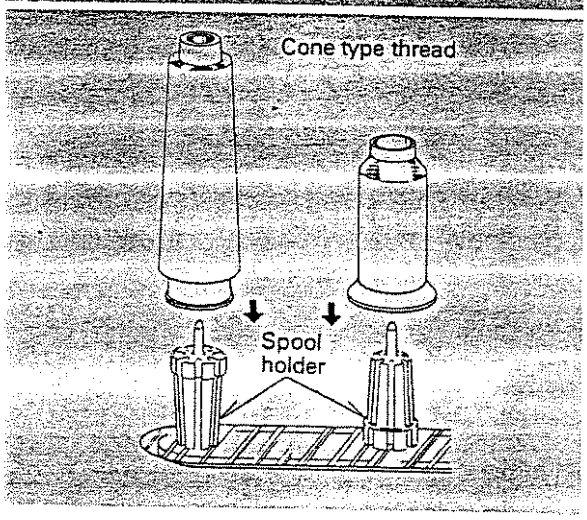

REMOVING STITCHES FROM SEWN FABRICS

Snip the needle thread at intervals. Then gently pull the looper thread(s) and the stitching will unravel and be easily removed.

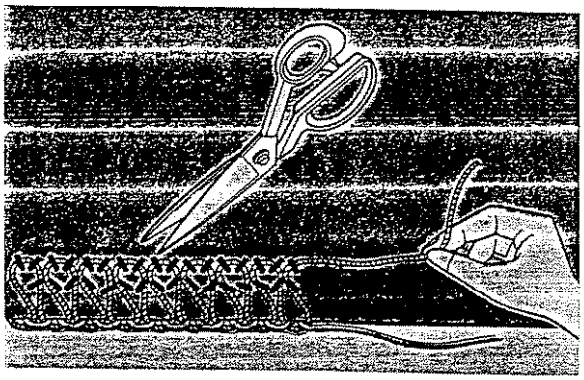

FINISH SEAMS

Unlined garments are a natural place to use the Superlock. Neat, clean seams can be achieved during construction, prior to, or after the garment is completed. The conventional 5/8 inch seam allowance makes a perfect place to overlock and trim your garments. This can be done by overlocking both pieces together or doing them separately to reduce bulk.

It is recommended to iron the cut edges to one side or open after completing your sewing to give a flat, neat look.

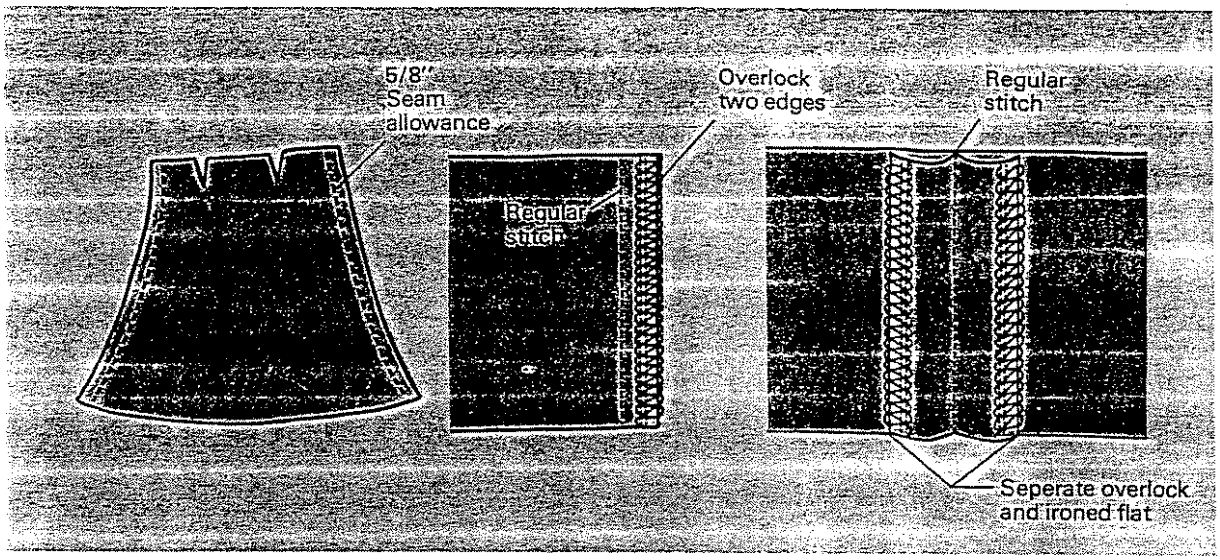

When finishing the overlock stitch, it is recommended to chain off about one inch, then use scissors to trim.

A) You may tie a knot in the chained ends. B) Use a small amount of White brand "Easy Stitch," a fabric sealant, or C) Thread the chained ends into the finished seam as shown.

There is no need to worry about the ends that will be crossed by another seam. The new seam will hold stitches in place.

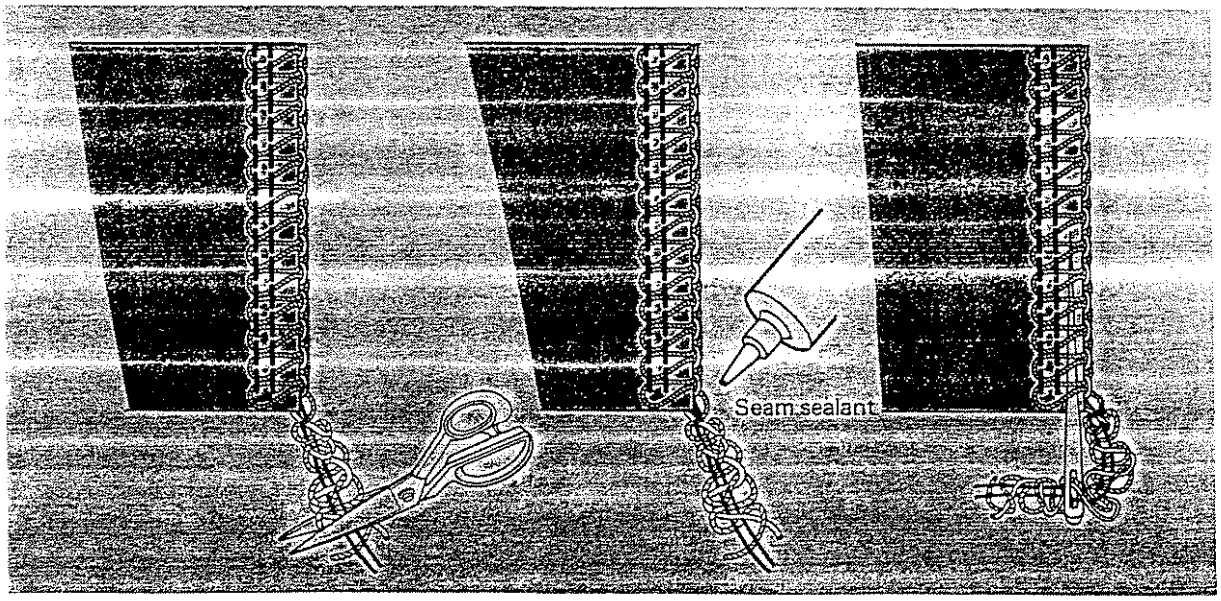

OUTSIDE CORNERS

Neat outside corners can be attained with your Superlock with a little practice. Sewing off and back on creates extra thread which must be disposed of and tied off.

To attain a neat outside corner do the following:

1. Sew one side of the fabric to end.
2. Carefully sew one or two stitches off the end.
3. Carefully raise the needle and presser foot.
4. Grasp fabric gently and rotate cloth.
5. Slide the thread off the seam forming tongue of needle plate.
6. Realign the edge of the fabric and put the cut edge of the fabric against the cutter.
7. Align the needle back into the needle line instead of the edge of fabric.
8. Overlock the edge as needed, repeat for other corners.

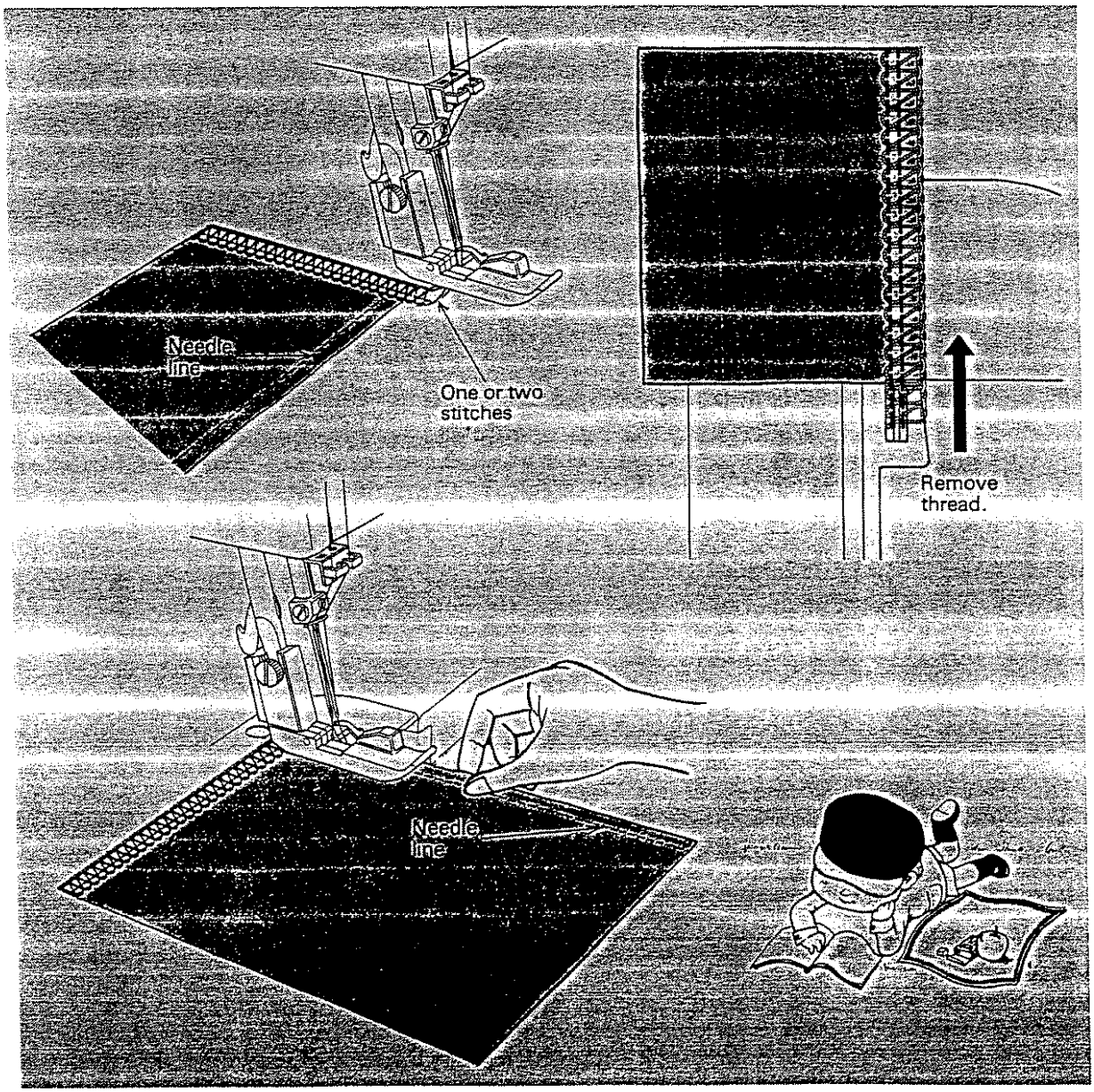

INSIDE CORNERS AND ANGLES

Inside corners may require a little practice prior to overlocking your finished garment.

You may either cut your fabric to desired size or mark your fabric and carefully follow your line and trim off excess.

For example: (Cut to size materials)

1. Align the fabric edge with the inside edge of cutter.
2. Overlock stitch to the inside edge, allowing your cutter to make one cut into the inside corner.
3. CAUTION: Your cutter is approximate ½" in front of the needle, so you mu fold your material away from the cutte Sew to the corner and stop.
4. Raise up presser foot and needle, piv material, align the fabric edge against t inside edge of cutter.
5. Slide the thread off the seam formi tongue of needle plate.
6. Align needle to form a square corner a sew the balance of your seam.

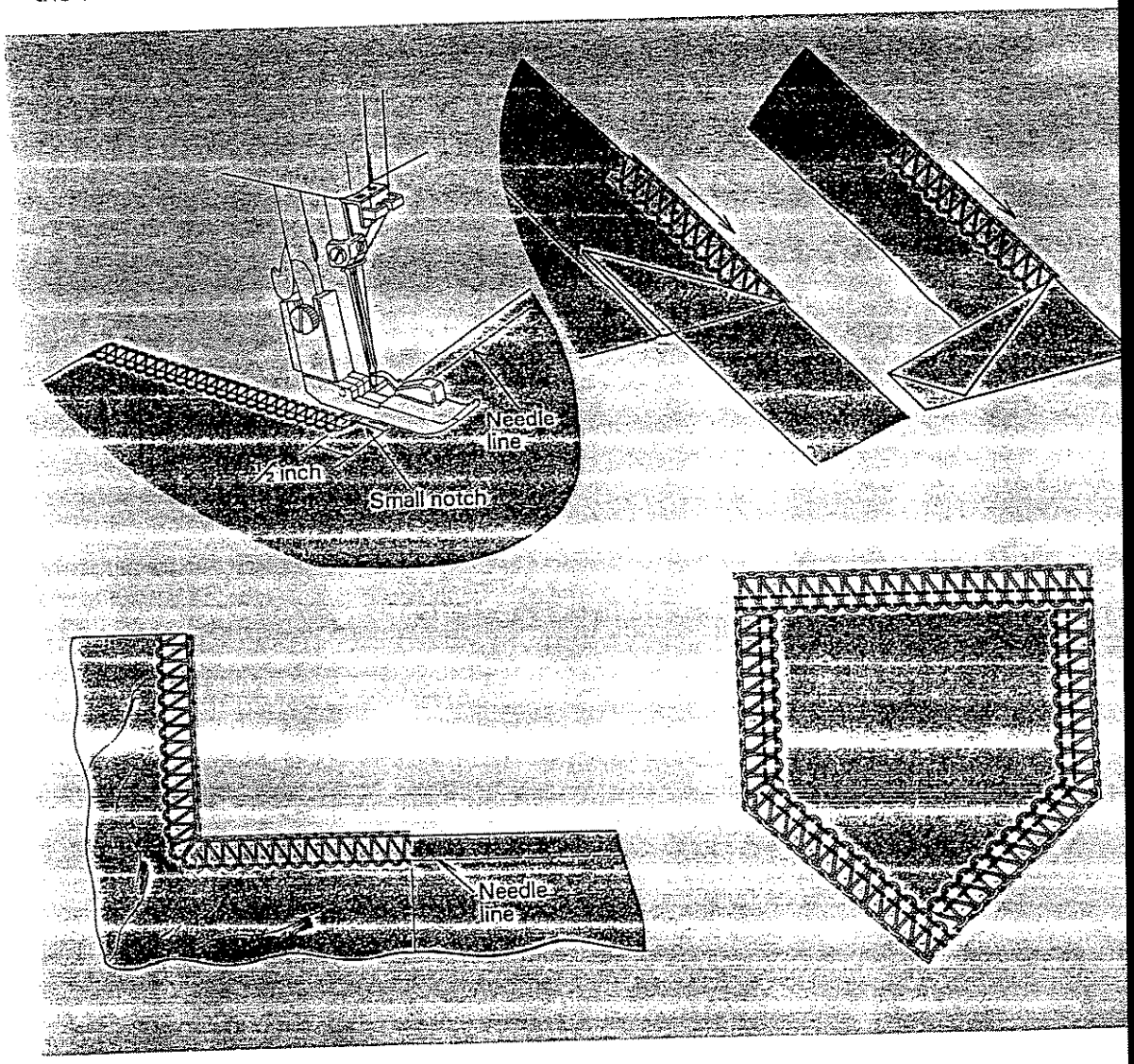

UNCUT MATERIAL: Follow the same procedure, but you must carefully follow your mark. Always consider that you will have excess cut-away material to handle.

OUTWARD CURVE

Your Superlock will sew a curved shape much more efficiently and readily than a sharp corner. It is simple to attain a neat clean look similar to a straight seam by doing the following:

1. Set up your Superlock as for a straight edge finish.
2. Reduce speed of the machine for easy handling.

CAUTION: KEEP FINGERS AWAY FROM NEEDLE AT ALL TIMES.

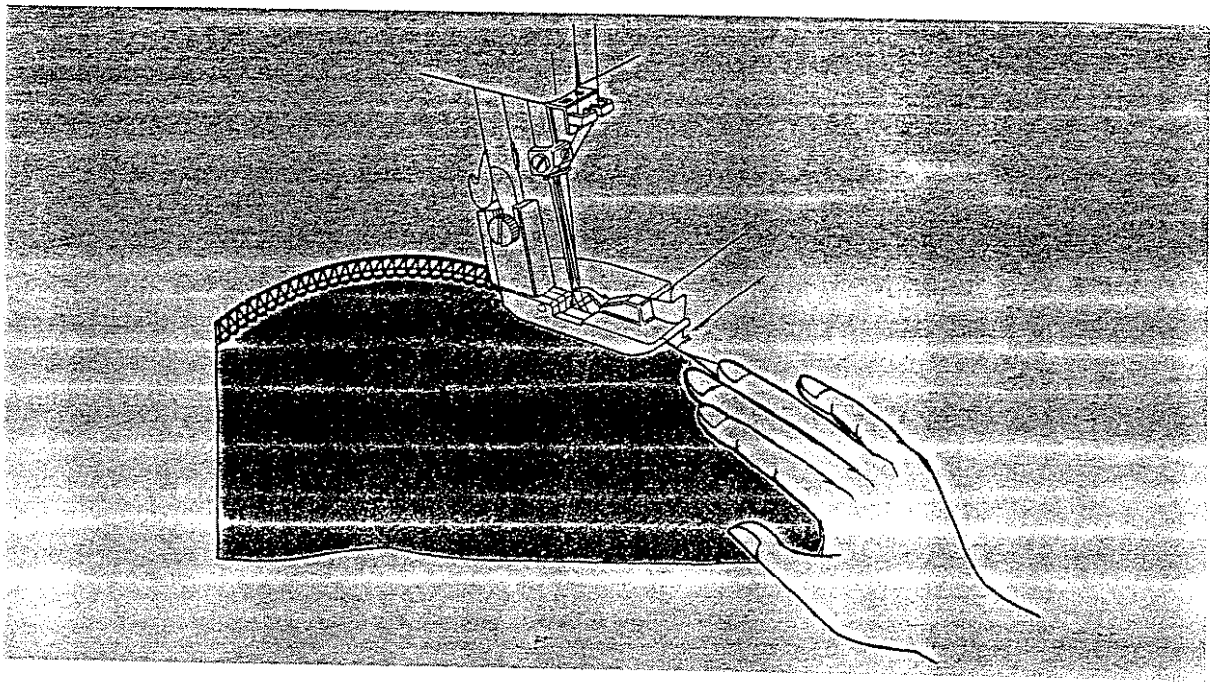

TURNING CURVED EDGES

For inside curves, guide fabric gently with trimming line of the fabric under the right front of the presser foot (or a little to the left), applying pressure at point A in the direction of the arrow with your left hand, and at the same time applying a little opposite pressure at point B with your right hand.

For outside curves place under the presser foot in a similar manner but applying the pressure in the opposite directions.

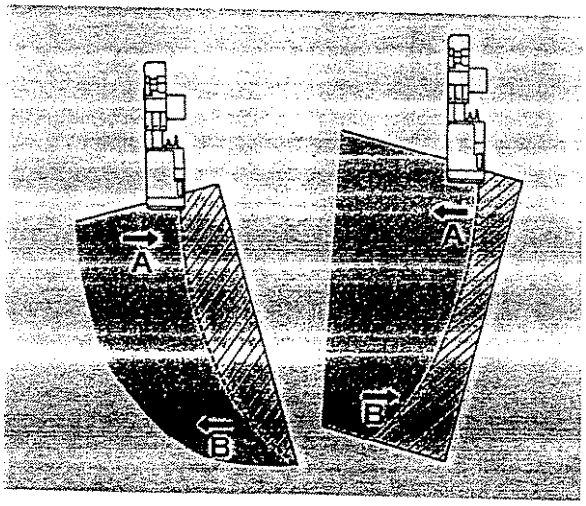

DECORATIVE EFFECTS

PIN TUCKS can be made very easily and simply by doing the following:

1. Fold the material along a predetermined line to be pin tucked, select the size or width of pin tuck, either 2.8 or 5.0 mm, and use appropriate needle.
2. Place edge of folded material against the cutter. The cutter is to be used as a guide only, do not cut into the folded fabric or you may remove the cutter if desired and use the edge of the needle plate as a guide.
3. Sew to edge, chain off, tie off by using White "Easy Stitch" fabric sealant.
4. Repeat for other pin tucks as required.

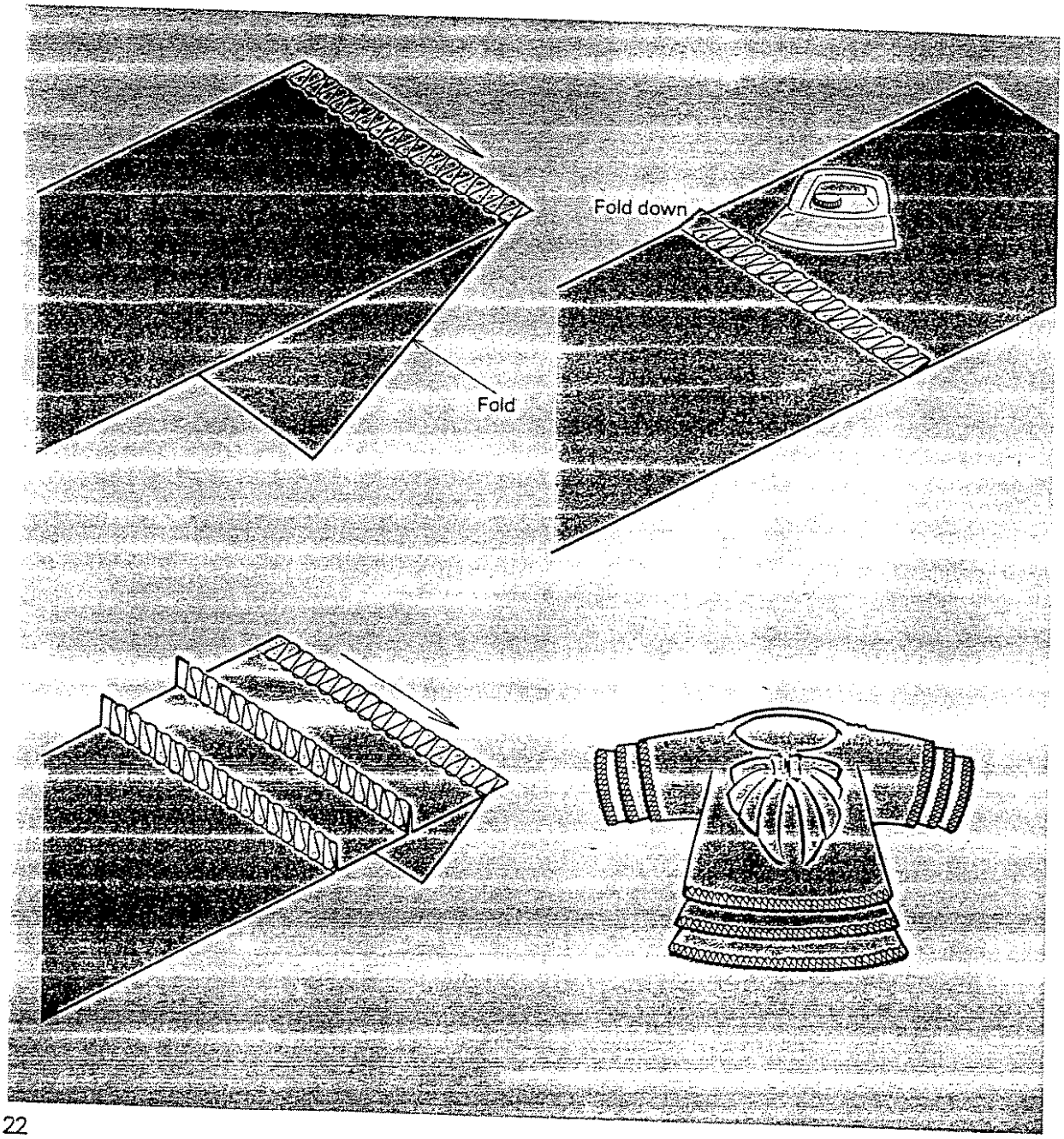

DECORATIVE EDGES to pockets, lapels, gowns, shirts, blouses, etc., can be achieved very easily with your Superlock. Threads like embroidery floss, candle-wicking, metallic, and top stitching thread can be incorporated into the threading system to attain a beautiful decorative effect as follows:

1. Many decorative threads are not available in spool or cone form and it may be necessary to wind this thread onto an empty spool which then can be used on your Superlock.
2. The upper looper thread will give the most decorative appearance.
3. Choose your color of contrasting threads to match material. Mount in position to thread on the lower looper and needle.
4. Using your choice of decorative thread, mount thread on spool pin and thread onto your upper looper. This thread may have to use a loose tension compared to the other two threads.
5. Always test on sample material.

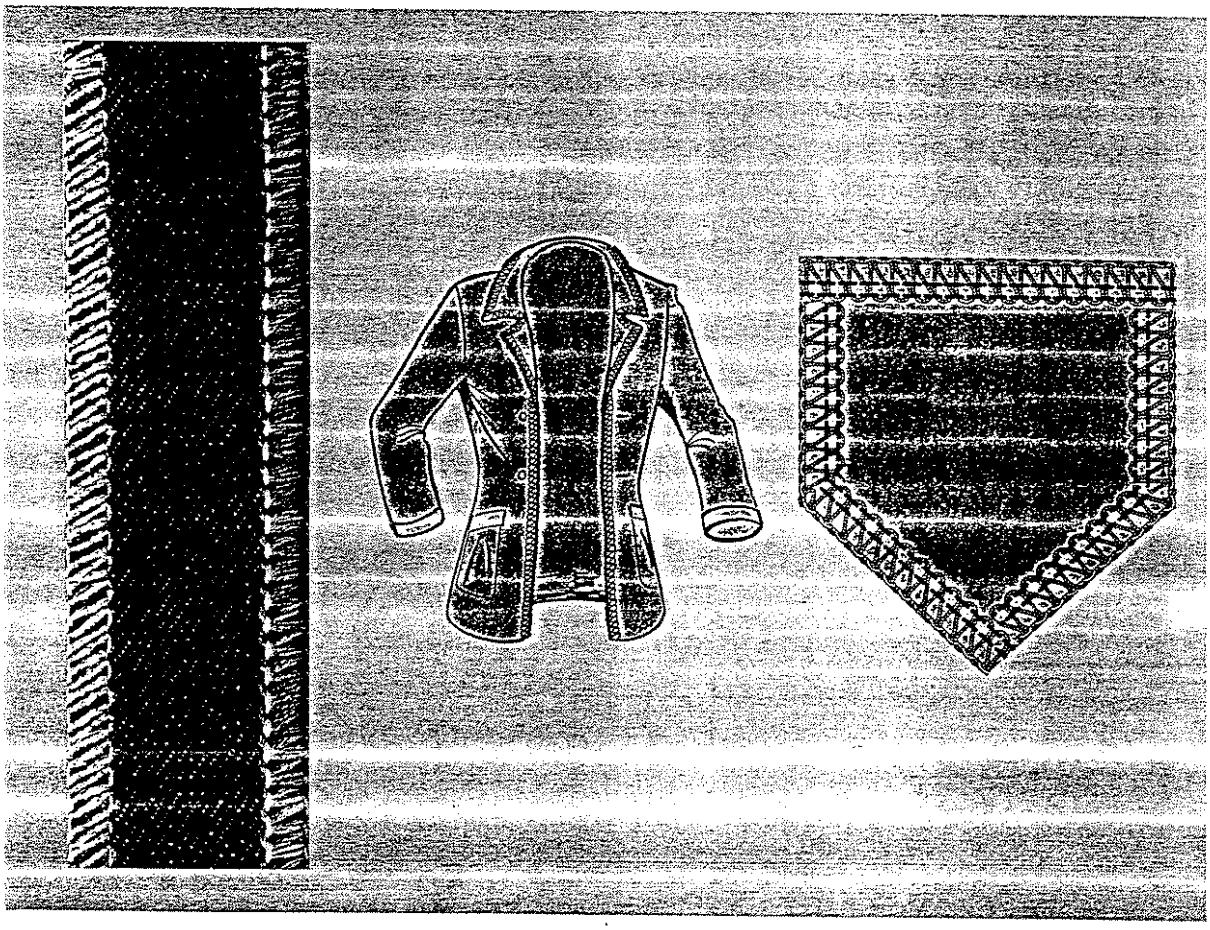

When using a mixture of threads like embroidery floss, candlewicking, metallic or other types of specialized threads, it may be necessary to make tension adjustments. It is always recommended to test your overlock prior to sewing your garment.

DECORATIVE BRAIDS can be made very easily by following the same procedure as decorative edge, with the exception that this same style of stitching is being done on a narrow braid, cording, or ribbon as wide as the overlock desired, 2.8 or 5.0 mm, using three thread overlock as explained on page 14.

You may also choose to use three same threads, namely embroidery floss, candle-wicking and top stitching thread to give you a full-looking braid. Metallic thread cannot be used when using three same threads because it has a tendency to break.

1. Choose your cord, braid, or ribbon. A contrasting color to your thread gives a very nice appearance.
2. You may use your cutter or edge of needle plate as a guide, making sure you do not cut the cord, braid, or ribbon.
3. You may also remove your cutter for this operation if desired and use the edge of needle plate as guide.
4. Carefully feed braid through your overlock sewing, over one edge, across over the other edge.
5. Finished braid can be sewn to other garments as a single braid or entwined with one or two other braids.

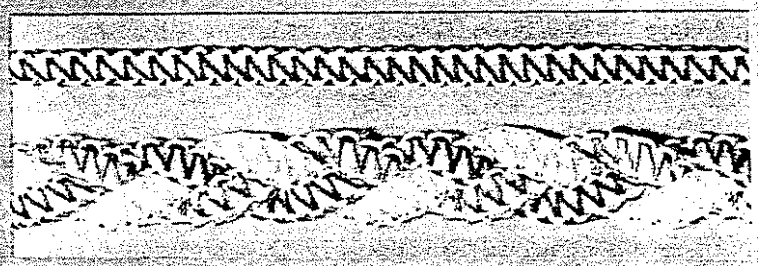

Decorative braids (5.0 mm)

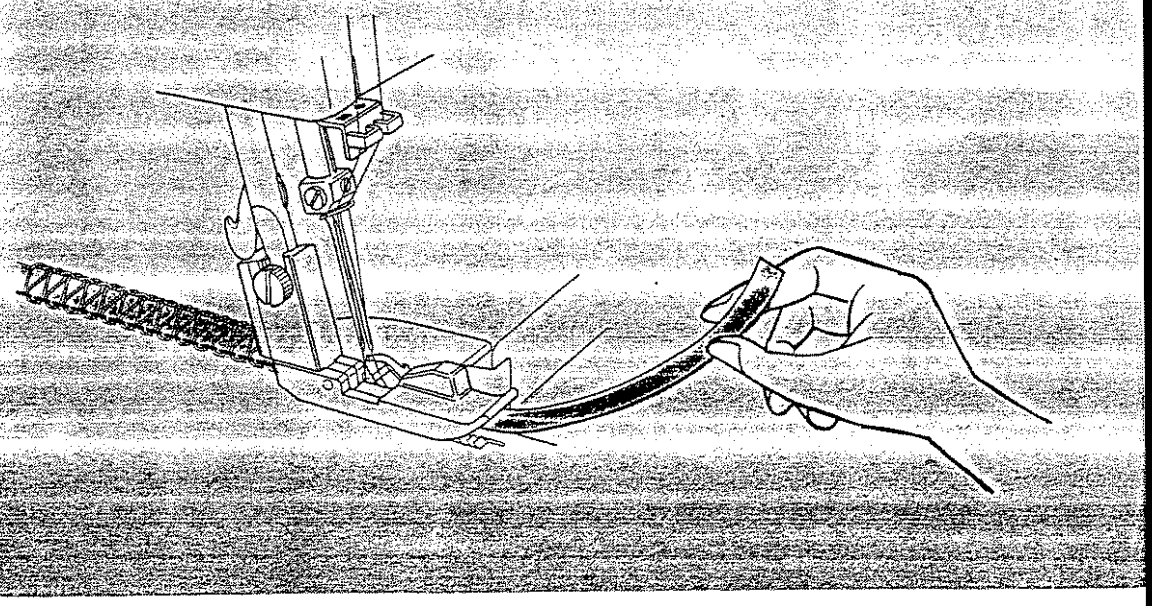

CORDED OVERLOCK

Corded overlock can be used to strengthen shoulder, sleeve or side seams when joining or making up knitted garments. As a decorative feature you can use knitting yarn of contrasting colors to further enchance Your garment. Your Superlock is equipped with a presser foot which has been designed to feed your cord or yarn to the left of the safety stitch or to the right. Follow instructions as follows:

1. Snap the detachable cord guide, No. 6184, in your accessory set onto the thread guide pole (Fig. 1).
2. Place a "filler" cord, such as a crochet cotton, gimp, wool, knitting yarn, or shirring elastic at the rear of the machine spool pin. Pass the cord through the cord guides (1) and (2) and then through the left needle thread guide (3). See Fig. 1.
3. Insert the cord through either the front or rear hole (according to the operation, see diagrams Figures 2 and 3), in the presser foot and pass it under and to the rear of the foot.
4. Place the material to be sewn as normal. Start at slow speed observing if cord is feeding correctly and increase speed as needed.

FOR JOINING SHOULDERS OR SLEEVES, pass the cord through the front hole, ensuring that it is fixed between the left and right needle threads as it is guided through the front hole (Fig. 2).

FOR JOINING SIDE SEAMS, pass the cord through the rear hole, ensuring it is positioned to the right needle thread. (Fig. 3)

FOR DECORATIVE EFFECTS, you may pass contrasting colors either through the front or rear hole or if you desire, pass cord or yarn through each hole.

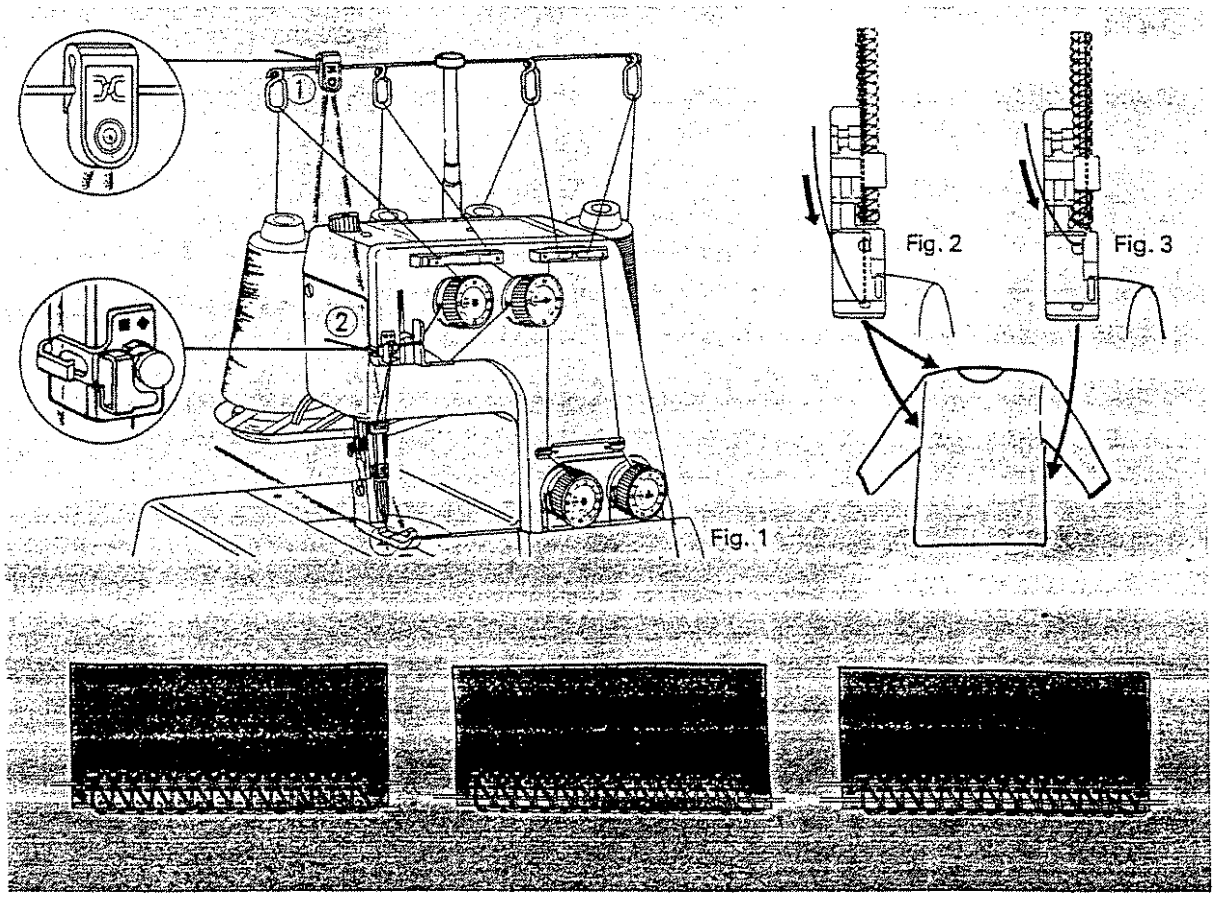

FOUR THREAD OVERLOCK ON KNITTED MATERIAL

A four thread overlock is a perfect stitch to finish bulk material. It gives you a conventional three thread overlock, plus the safety stitch through your overlock to "bind" and hold your material from raveling.

We recommend a yarn, embroidery floss or top stitching thread to be threaded through your loopers and conventional threads through your needles. This will give you an overlock stitch which will blend into your knitted materials and a decorative effect when using matched or contrasting colors on your loopers.

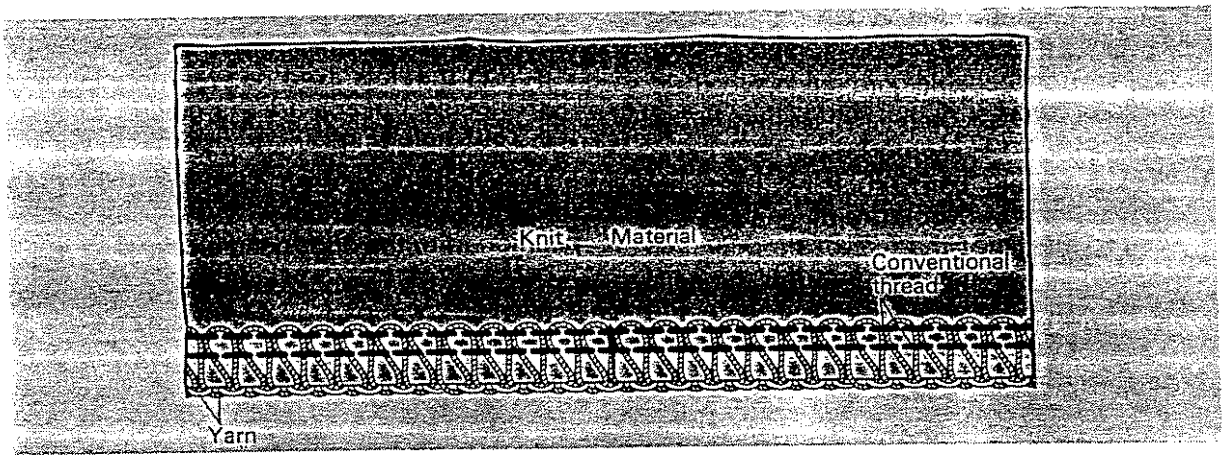

QUILTING SQUARES/TRIANGLES/DIAMONDS

The three or four thread overlock can make your patchwork quilting a much simpler operation. You may finish your raw edges by chaining the pieces together, as shown below, or do them individually. In all cases it will give you clean, neat, unravelled squares.

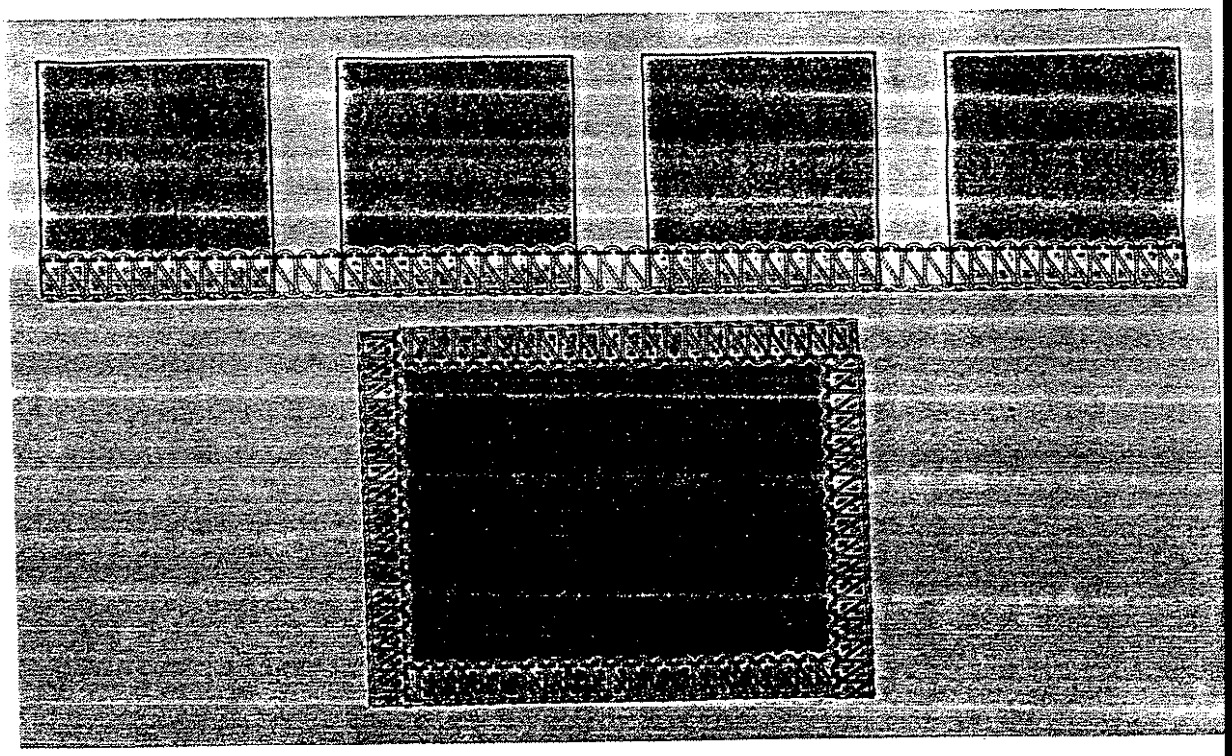

CARING FOR YOUR MACHINE

REPLACEMENT OF MOVING CUTTER

Should it become necessary to replace the moving cutter, due to it becoming blunt, apply the following procedure. A spare cutter will be found in your accessories.

NOTE: You should not need to replace the fixed cutter, which is made of a special hard alloy material.

FIRST REMOVE THE POWER PLUG FROM THE SUPPLY SOCKET-OUTLET.

1. Swing open both front and side covers.
2. Remove the old cutter by loosening the screw (A) with the small spanner in your accessoires. Using the small brush also supplied, to clean away any accumulation of lint etc. around the exposed area.
3. Lower the shaft (B) to its lowest position by turning the hand wheel towards you by hand. *In this position,* fit the new moving cutter by replacing screw (A) and retighten, ENSURING THAT THE EDGE OF THE MOVING CUTTER IS APPROXIMATELY 0.5 mm BELOW THE SURFACE OF THE FIXED CUTTER - see inset picture Fig. 2.

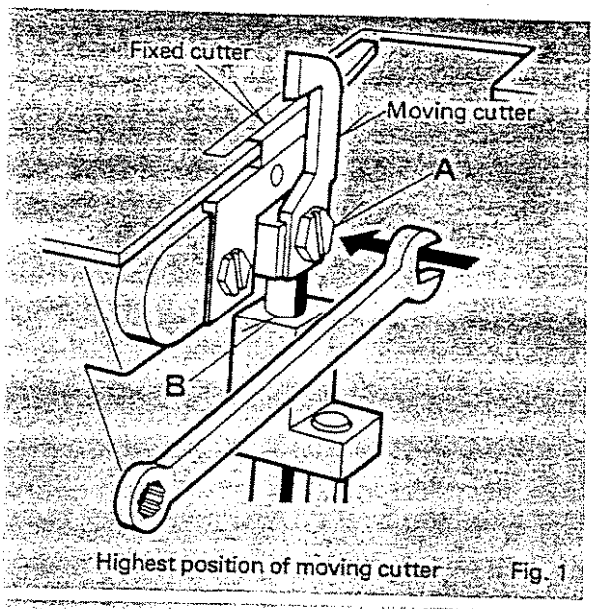

Highest position of moving cutter Fig. 1

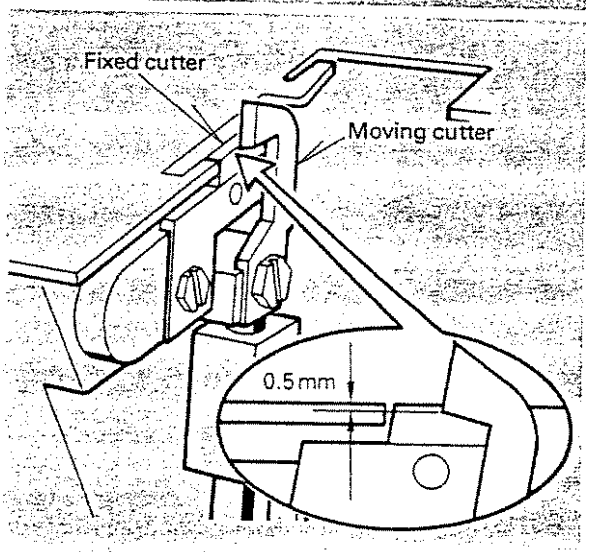

Lowest position of moving cutter Fig. 2

CHANGING LIGHT BULB

The sewing light is located under the machine arm, as shown, and illuminates the sewing area only.

DISCONNECT MACHINE FROM THE POWER SUPPLY BY REMOVING PLUG FROM SOCKET-OUTLET.

DO NOT REPLACE BULB OF MORE THAN 15 WATTS MAX.

To change bulb, pull down light cover, remove old bulb by unscrewing. Replace with new bulb.

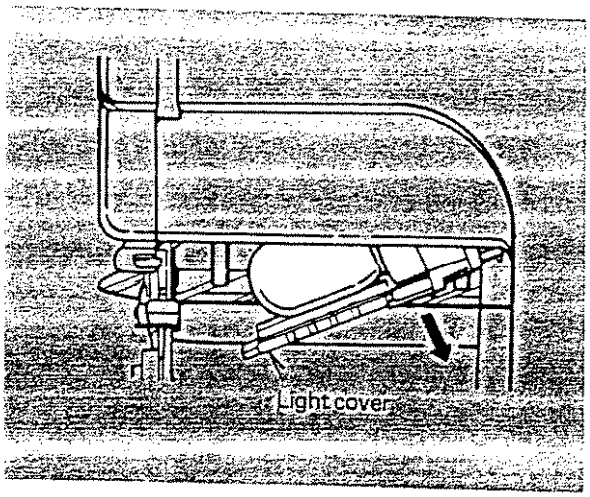

CLEANING AND OILING

To keep you machine running smoothly, it is necessary to keep it clean and lubricated at all times.

FIRST DISCONNECT MACHINE FROM POWER SUPPLY BY REMOVING PLUG FROM SOCKET-OUTLET.

Open both front and side covers. Using the brush provided, remove dust and lint that accumulate around the whole exposed area, and then apply a few drops of oil to the points indicated by arrows.

Apply more oil to the point (A) than others.

ALWAYS USE A GOOD QUALITY SEWING MACHINE OIL.

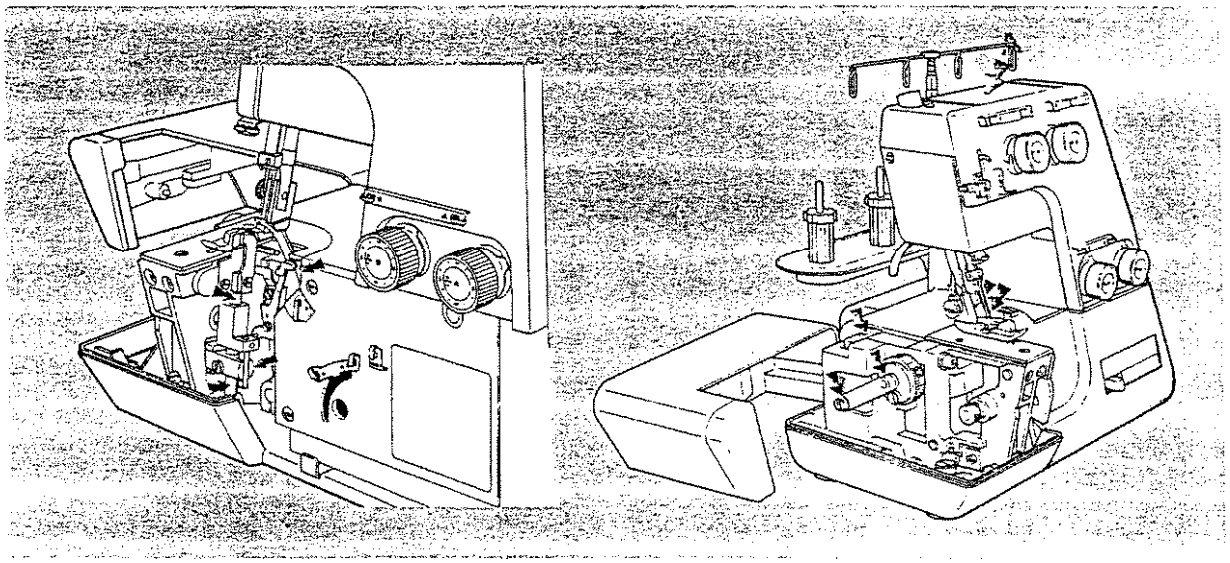

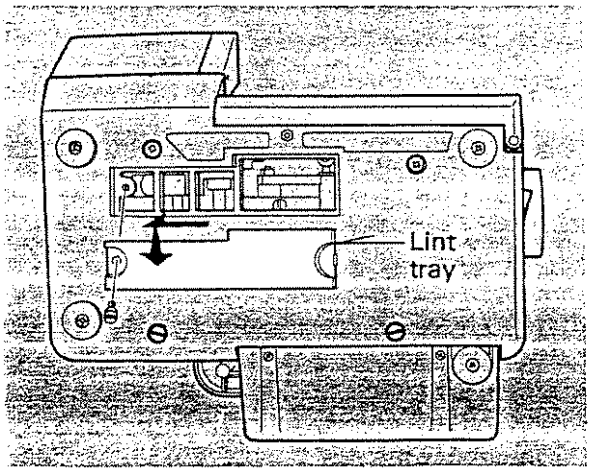

CLEANING THE BOTTOM OF THE MACHINE

Lay the machine on its back and take off the lint tray by removing the single securing screw.

Using the brush provided, remove any dust and lint that may have accumulated in the tray and bottom of the machine.

Replace the tray and secure by re-tightening the screw.

CHECKING PERFORMANCE PROBLEMS

PROBLEM	PROBABLE CAUSE	CORRECTION
Irregular Stitches	Incorrect thread tension(s). Incorrect size needle. **Improper threading.** Pulling fabric. Loose presser foot.	Reset thread tension(s). Choose correct size needle for thread and fabric. **Re-thread machine.** Do not pull fabric; guide it gently. Reset presser foot.
Breaking Needle	Pulling fabric. Incorrect size needle. Incorrect setting of needle. Loose presser foot.	Do not pull fabric; guide it gently. Choose correct size needle for thread and fabric. Reset needle. Reset presser foot.
Puckering	Incorrect thread tension(s). Bent or blunt needle. Loose presser foot.	Reset thread tension(s). Insert new needle. Reset presser foot.
Skipping Stitches	**Improper threading.** Incorrect size needle. Bent or blunt needle. Incorrect setting of needle.	**Re-thread machine.** Choose correct size needle for thread and fabric. Insert new needle. Reset needle.
Breaking Threads	**Improper threading.** Bent needle. **Thread tension(s) too tight.** Incorrect setting of needle. Thread spool tangled. Thread guide pole not extended.	**Re-thread machine.** Insert new needle. **Reset thread tension(s).** Reset needle. Reset spool properly. Fully extend guide pole.

SPECIFICATION OF MACHINE

ITEM	SPECIFICATION
Number of Threads	4 or 3 Threads
Overedge Stitch Width	5 mm (13/64") (left needle) and 2.8 mm (7/64") (right needle)
Needle	HA × 1 SP, HA × 1 (130/705 H)
Stitch Length	1 — 5 mm (3/64" — 13/64")
Stitching Speed	Up to 1500 stitches per minute
Dimensions	310 mm (W) × 263 mm (D) × 290 mm (H) (12⅜" × 10½" × 11½")
Weight	7.7 Kg (17 lbs.)

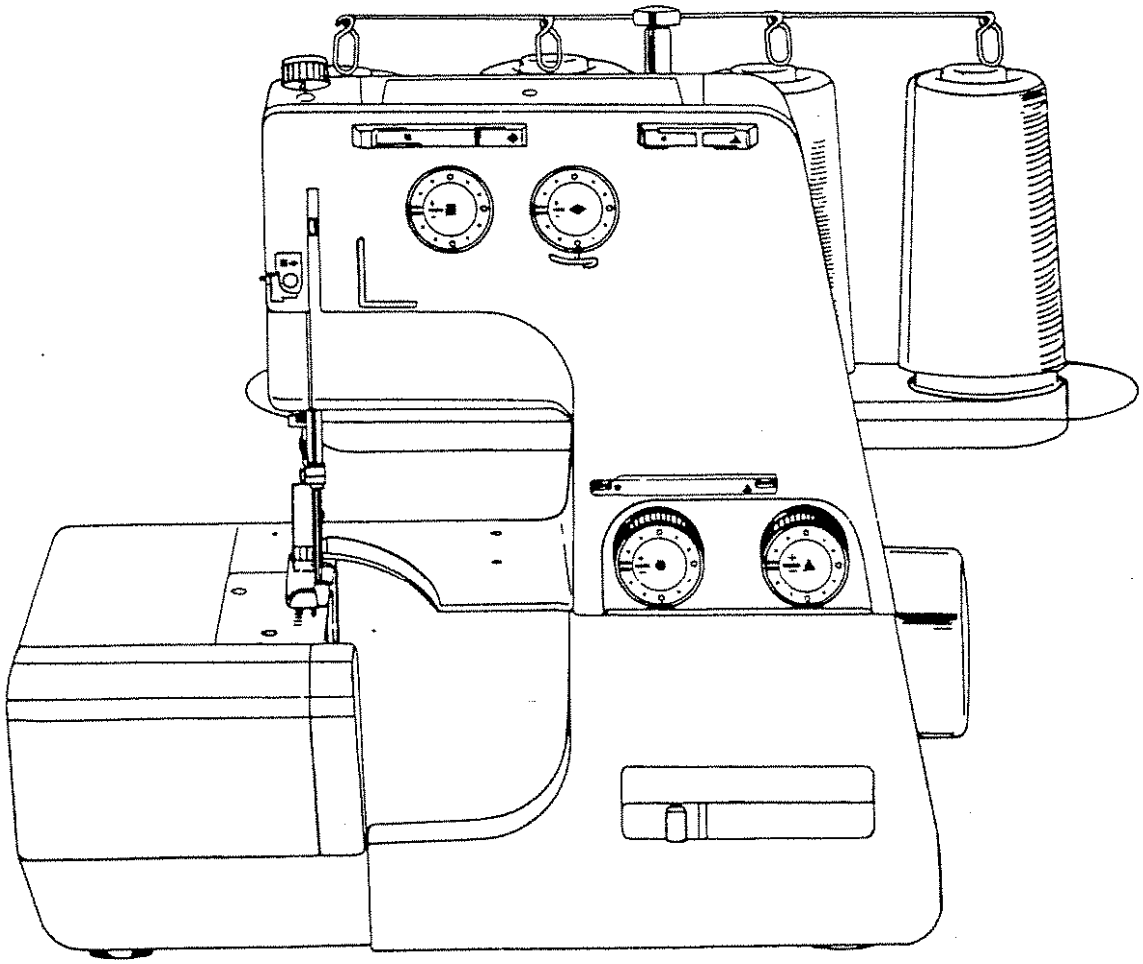

OPTIONAL ACCESSORIES AVAILABLE FOR YOUR SUPERLOCK

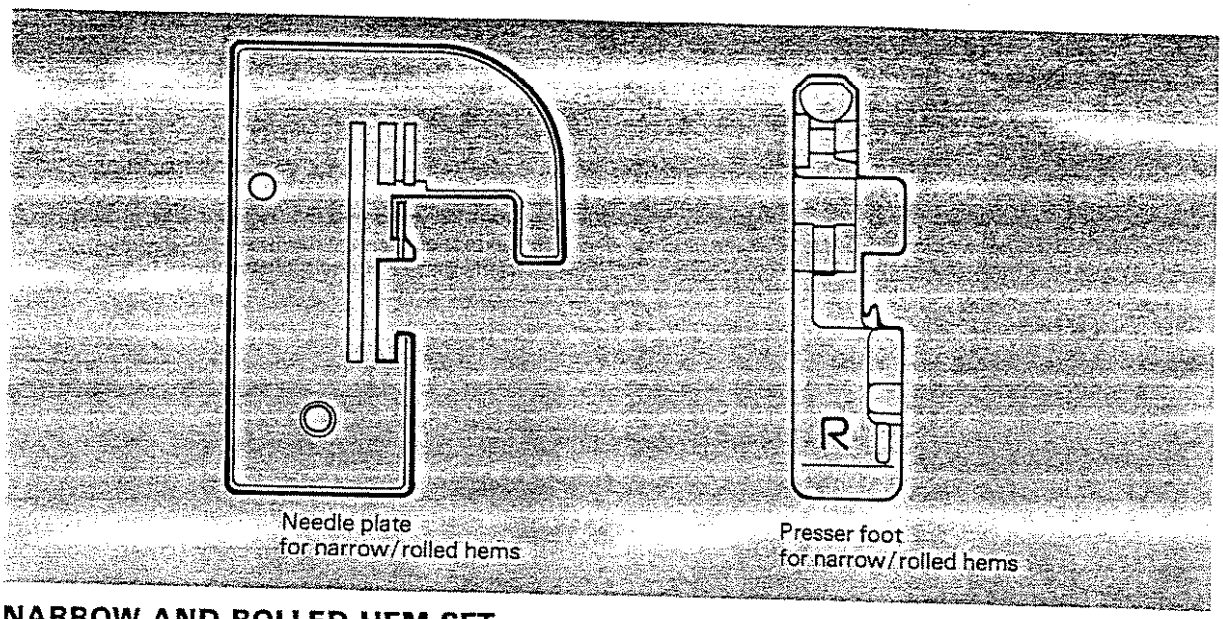

Needle plate
for narrow/rolled hems

Presser foot
for narrow/rolled hems

NARROW AND ROLLED HEM SET

Narrow and rolled hems are ideal for use on thin materials such as georgette crepe, crepe de chine, silk etc.

A narrow hem is formed by overlocking the fabric edge about 2 mm in width, as shown in Fig. 1.

A rolled hem is formed by adjusting the thread tensions so that the fabric is overlocked, folded under and secured as shown in Fig. 2.

In addition to the above hems, a very pleasing shell hem can be produced, particularly when sewing on fine 'scarflike' materials as shown in Fig. 3.

In view of the nature of these hems, they are unsuitable for use on 'hard' or 'heavy' materials.

To make these hems proceed as follows: —

1. Remove left needle and use right needle only.
2. Fit the special needle plate and presser foot.
3. Thread tension control for right needle **through check spring** (page 10).
4. Use the appropriate size and type of thread as suggested in the chart on page 17.
5. Thread tensions for these types of hems will differ from normal overlocking, particularly with different types of fabric. Study the recommendations in the chart and adjust the tension controls accordingly.
6. Stitch length should normally be between 1 - 2.
7. Always test the stitch and tension settings on a spare piece of the fabric you intend using, before starting to sew the actual garment.

A narrow rolled hems is no problem when fabrics are prewashed. With prewashing you will not have to worry about dimensioal changes or shrinking, or rough outside edges as will occur on starched or stiff materials.

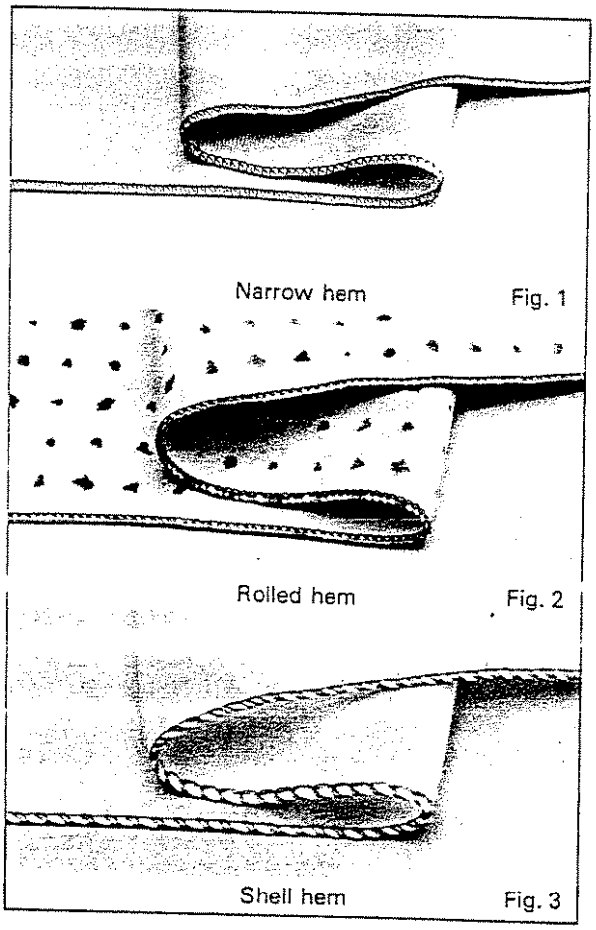

Narrow hem — Fig. 1

Rolled hem — Fig. 2

Shell hem — Fig. 3

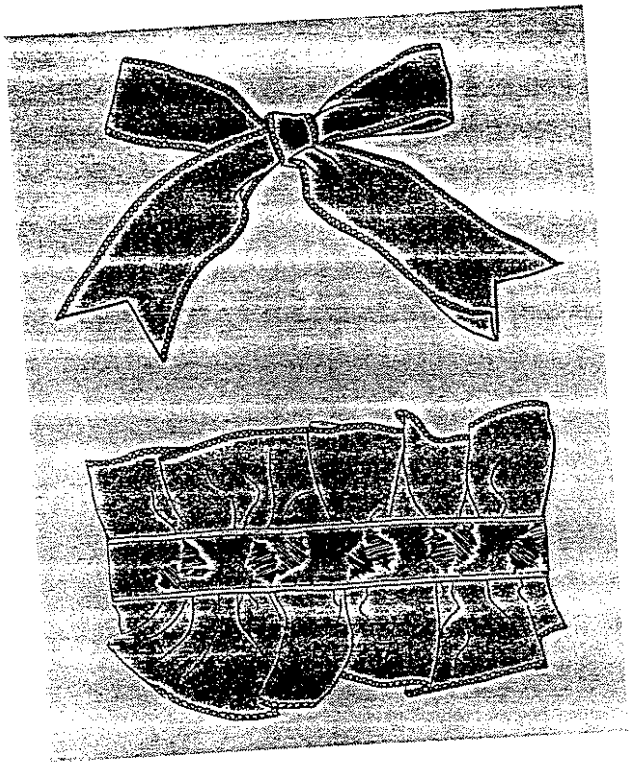

APPLICATIONS

NARROW HEMMING ON RIBBON

Fabric - Lightweight cotton
Stitch length - 2

Thread	Thread tension
Needle - Polyester No. 50	4
Upper looper - Bulk nylon (less stretchable)	9
Lower looper - Bulk nylon (less stretchable)	9

ROLLED HEMMING ON FRILL

Fabric - Georgette crepe
Stitch length - 2

Thread	Thread tension
Needle - Polyester No. 100	4
Upper looper - Bulk nylon (less stretchable)	3
Lower looper - Bulk nylon (less stretchable)	1

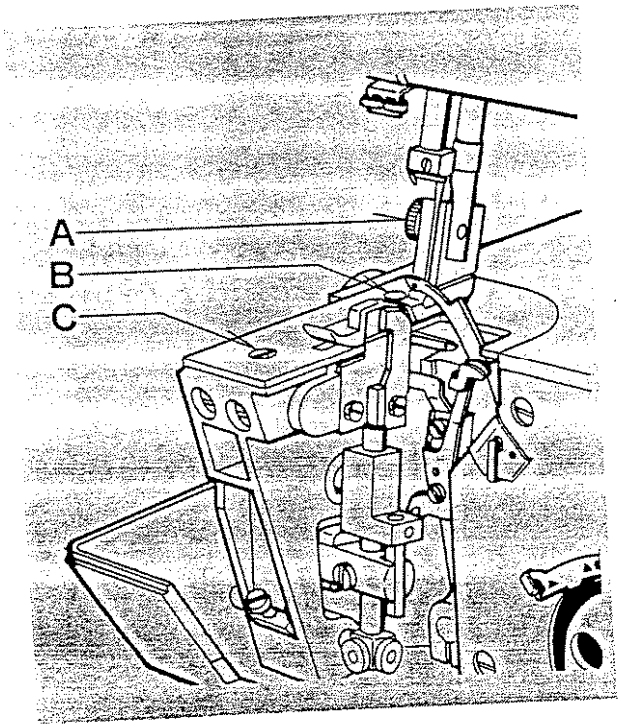

CHANGING NEEDLE PLATE AND PRESSER FOOT

FIRST DISCONNECT MACHINE FROM POWER SUPPLY BY REMOVING PLUG FROM SOCKET-OUTLET.

During the changing operation be careful to keep fingers away from both cutters.

1. Unthread machine.
2. Raise needle to its highest point by turning hand wheel towards you and also raise presser foot.
3. Open both front and side cover plates.
4. Loosen screw (A) and remove presser foot in use. Place new presser foot into position and secure with screw (A).
5. Take off needle plate in use, by removing screw (C) and lifting plate up from guide pin (B).
6. Place new needle plate into position and secure with screw (C).

MACHINE ADJUSTMENT CHART FOR NARROW AND ROLLED HEMS

	Narrow Overlock Hems	Rolled Hems
Needle Plate and Presser Foot	Use needle plate and presser foot for narrow/rolled hems (see page 32).	
Stitch Length	**1.5 to 2	1 to 2
Needle	75 or 90 (11 or 14)	75 (11)
Thread for Needle	Polyester, Nylon, Silk No. 50-100	Nylon No. 100
Upper Looper	Polyester, Nylon, Silk No. 50-100 Bulk nylon (less stretchable)	Bulk nylon (less stretchable)
Lower Looper		
*Thread Tension Control for Needle (yellow)	4	(Thread through Check Spring.) 4
Upper Looper (blue)	9	3
Lower Looper (purple)	9	1

* The best tensions for one fabric may not be correct for another. The required tensions depend upon stiffness and thickness of fabric, thread size and type. If necessary, readjust referring to the above tension balance.

** When overlocking fine, 'scarf-like' materials with narrow hem, set stitch length between 3 - 4 and decrease thread tensions slightly.

OPTIONAL ACCESSORIES AVAILABLE FOR YOUR SUPERLOCK

BLIND HEM FOOT

BLIND HEMS USING SPECIAL FOOT

Blind hem feet are obtainable as an optional extra and are available in two sizes. Part No. 11518 (0.5) for fine/medium fabrics and Part No. 11521 (1.0) for medium/heavy fabrics.

They are both suitable for use on White Superlock models 503/523/534.

Fit the appropriate foot. Set the stitch length 4 - 5. In the case of Superlock 534 thread only the LEFT HAND NEEDLE. In the case of Superlock models 503/523 use the 3.5 mm needle plate.

Now proceed as follows:

1. Turn up the hem to the required depth and press. Fold the hem back against the 'right' side of the garment, creating a 'soft' fold on the 'wrong' side of the fabric - see Fig. 1.
2. Place fabric under the presser foot with the 'wrong' side uppermost. Feed the folded edge through the guide in the front of the foot and lower the presser foot lever. Try a stitch (or several stitches) on a spare piece of the actual fabric, and adjust the guide so that the needle just catches the fold. Adjust the guide by means of the small screw on the top of the foot - see Fig. 2.
3. When correctly set, sew the hem. The outside edge will be cut away by the machine - see also Fig. 2. After completion, open out and press again. The stitches should be almost invisible on the 'right' of the fabric - see Fig. 3.

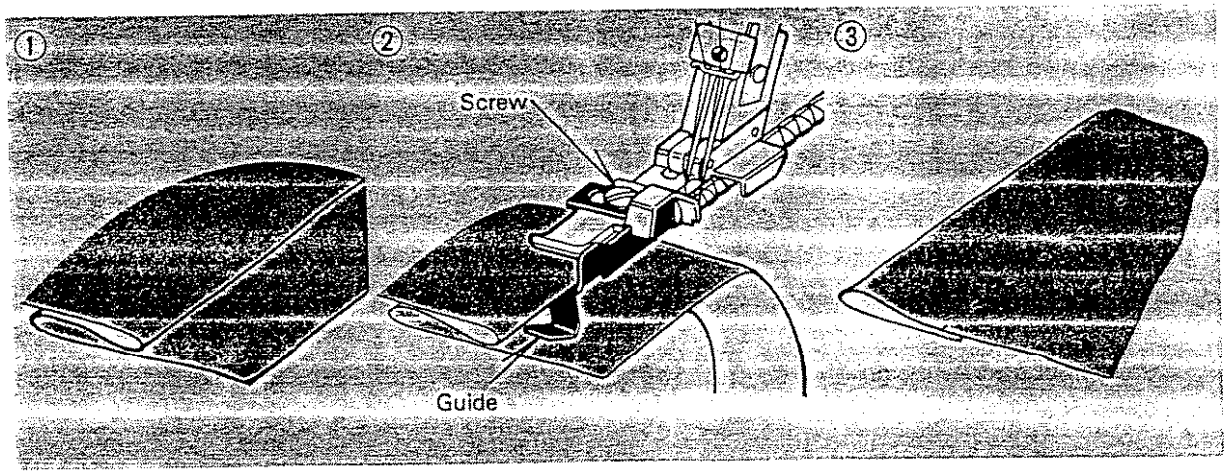

THESE ACCESSORIES ARE AVAILABLE FROM YOUR DEALER

_____ or

_____

_____

White Sewing Machine Co.,
11750 Berea Road
Cleveland OH 44111

ELASTIC FOOT

An elastic foot is available as an optional extra. This foot will guide your elastic and at the same time apply pressure to the elastic with our specially designed tension controlled roller, allowing you to control the elasticity while sewing.

Instructions for special elastic foot:
(Part No. 11535)

For Model 534 using 4 threads:

1. Replace regular foot with special foot.
2. Set stitch length at about 4.
3. Slightly raise the roller portion of the foot and insert elastic tape between the roller and the lower support bar as illustrated, until the edge of elastic reaches the feed dog teeth.
4. Sew the elastic tape for about one inch or more to confirm if the tape is properly sewn.
5. Insert the fabric under the foot and sew together with the elastic tape.
6. Check the stitches to make sure they are proper and adjust tension (tighter) if necessary.
7. Adjust the tension control of the roller so that the desired finish can be obtained.
   a. Tighter tension of the roller gives more elasticity of the fabric after it is sewn.
   b. Weaker tension of the roller gives less elasticity of the fabric.

For Model 534 using 3 threads:
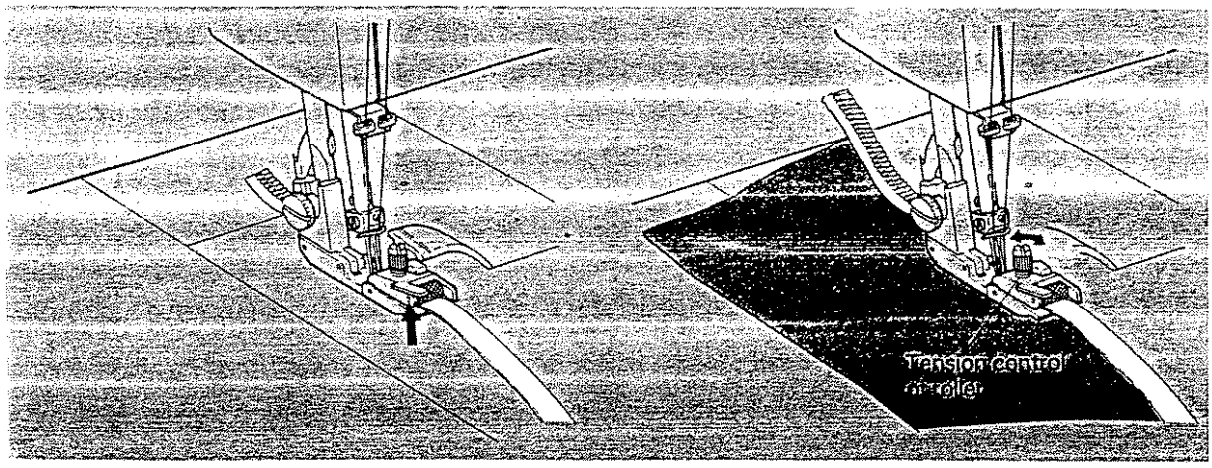
1. Replace regular foot with special foot.
2. Either use the left needle or right needle only.
3. Set stitch length at about 4.
4. Slightly raise the roller portion of the foot and insert elastic tape between the roller and the lower support bar as illustrated, until the edge of elastic reaches the feed dog teeth.
5. Sew the elastic tape for about one inch or more to confirm if the tape is properly sewn.
6. Insert the fabric under the foot and sew together with the elastic tape.
7. Check the stitches to make sure they are proper and adjust tension (tighter) if necessary.
8. Adjust the tension control of the roller so that the desired finish can be obtained.
   a. Tighter tension of the roller gives more elasticity of the fabric after it is sewn.
   b. Weaker tension of the roller gives less elasticity of the fabric.